Pioneer sound.vision.soul



ftp://lexus.serveftp.com
by flash_LAV

Service Manual

TOYOTA

ORDER NO.
CRT3022

LEXUS RX330 AUDIO SYSTEM HEAD UNIT

VEHICLE	DESTINATION	PRODUCED AFTER	TOYOTA PART No.	ID No.	PIONEER MODEL No.
LEXUS RX330	U.S.A. CANADA	February 2003	86120-48180	P6826	FX-MG8227ZT/UC
			86120-48320	P6826	FX-MG8227ZT-91/UC
			86120-48190	P6827	FX-MG8327ZT/UC
			86120-48330	P6827	FX-MG8327ZT-91/UC

Manufactured for TOYOTA
by PIONEER CORPORATION

PUB. NO. CRT3022

flashLAV
www.club-lexus.ru

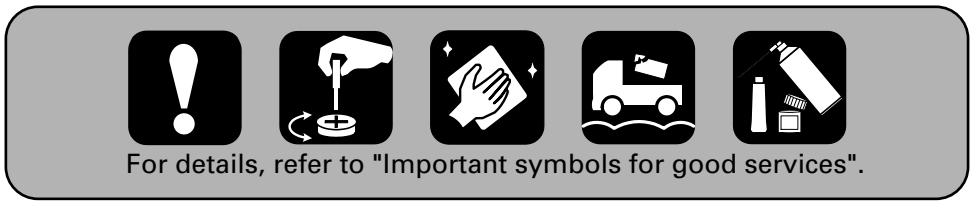

FX-MG8227ZT/UC(P6826)

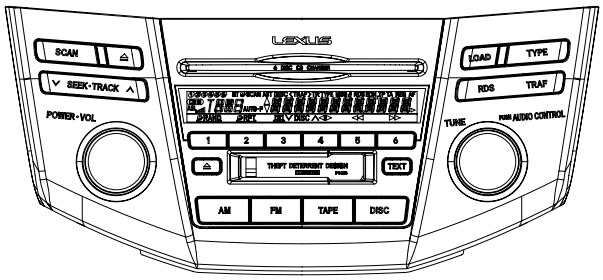

FX-MG8327ZT/UC(P6827)

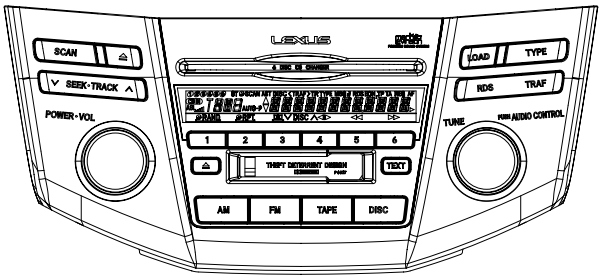

● This service manual should be used together with the following manual(s):

Model No.	Order No.	Mech. Module	Remarks
CX-1011	CRT2406	3L	Cassette Mech. Module:Mech.Description, Disassembly
CX-951	CRT2872	G2	CD Mech. Module:Circuit Description, Mech.Description, Disassembly

● **Dolby noise reduction manufactured under license from Dolby Laboratories Licensing Corporation.**
"Dolby" and the double-D symbol are trademarks of Dolby Laboratories Licensing Corporation.

flashLAV
www.club-lexus.ru

SAFETY INFORMATION

● CD section precaution

1. Before disassembling the unit, be sure to turn off the power. Unplugging and plugging the connectors during power-on mode may damage the ICs inside the unit.
2. To protect the pickup unit from electrostatic discharge during servicing, take an appropriate treatment (shorting-solder) by referring to “the DISASSEMBLY” on page 85.
3. After replacing the pickup unit, be sure to check the grating. (See p.75.)

This service manual is intended for qualified service technicians; it is not meant for the casual do-it-yourselfer.
Qualified technicians have the necessary test equipment and tools, and have been trained to properly and safely repair complex products such as those covered by this manual.
Improperly performed repairs can adversely affect the safety and reliability of the product and may void the warranty.
If you are not qualified to perform the repair of this product properly and safely, you should not risk trying to do so and refer the repair to a qualified service technician.

flashLAV
www.club-lexus.ru

[Important symbols for good services]
In this manual, the symbols shown-below indicate that adjustments, settings or cleaning should be made securely.
When you find the procedures bearing any of the symbols, be sure to fulfill them:

1. Product safety



You should conform to the regulations governing the product (safety, radio and noise, and other regulations), and should keep the safety during servicing by following the safety instructions described in this manual.

2. Adjustments



To keep the original performances of the product, optimum adjustments or specification confirmation is indispensable. In accordance with the procedures or instructions described in this manual, adjustments should be performed.

3. Cleaning



For optical pickups, tape-deck heads, lenses and mirrors used in projection monitors, and other parts requiring cleaning, proper cleaning should be performed to restore their performances.

4. Shipping mode and shipping screws



To protect the product from damages or failures that may be caused during transit, the shipping mode should be set or the shipping screws should be installed before shipping out in accordance with this manual, if necessary.

5. Lubricants, glues, and replacement parts



Appropriately applying grease or glue can maintain the product performances. But improper lubrication or applying glue may lead to failures or troubles in the product. By following the instructions in this manual, be sure to apply the prescribed grease or glue to proper portions by the appropriate amount.For replacement parts or tools, the prescribed ones should be used.

flashLAV
www.club-lexus.ru

CONTENTS

SAFETY INFORMATION 3
1. SPECIFICATIONS 6
2. EXPLODED VIEWS AND PARTS LIST 7
2.1 PACKING(FX-MG8227ZT-91/UC, FX-MG8327ZT-91/UC) 7
2.2 EXTERIOR 8
2.3 CD MECHANISM UNIT(1) 12
2.4 CD MECHANISM UNIT(2) 14
2.5 CASSETTE MECHANISM MODULE 16
3. BLOCK DIAGRAM AND SCHEMATIC DIAGRAM 19
3.1 BLOCK DIAGRAM(1) 19
3.2 BLOCK DIAGRAM(2) 20
3.3 OVERALL CONNECTION DIAGRAM(GUIDE PAGE) 22
3.4 KEYBOARD UNIT 28
3.5 CD MECHANISM MODULE(GUIDE PAGE) 30
3.6 CASSETTE MECHANISM MODULE 40
4. PCB CONNECTION DIAGRAM 42
4.1 MAIN UNIT 42
4.2 KEYBOARD PCB 46
4.3 CD MECHANISM MODULE 48
4.4 CASSETTE MECHANISM MODULE 54
4.5 RIGHT PCB, LEFT PCB 56
5. ELECTRICAL PARTS LIST 57
6. ADJUSTMENT 66
6.1 CONNECTION DIAGRAM 66
6.2 AUDIO, TUNER ADJUSTMENT 70
6.3 TEST MODE 72
6.4 CD ADJUSTMENT 73
6.5 CHECKING THE GRATING AFTER CHANGING THE PICKUP UNIT 75
6.6 TEST MODE(CD) 77
6.7 AVC-LAN DIAGNOSIS MODE 81
7. GENERAL INFORMATION 85
7.1 DIAGNOSIS 85
7.1.1 DISASSEMBLY 85
7.1.2 PCB LOCATIONS 90
7.1.3 CONNECTOR FUNCTION DESCRIPTION 91
7.2 PARTS 92
7.2.1 IC 92
7.2.2 DISPLAY 99
7.3 EXPLANATION 100
7.3.1 SYSTEM BLOCK DIAGRAM 100
7.3.2 OPERATIONAL FLOW CHART 103
7.4 NOTES ON SERVICING 104
7.4.1 CLEANING 104
7.4.2 FACTORY SETTINGS 104
8. OPERATIONS 105

COMPACT disc DIGITAL AUDIO TEXT

flashLAV
www.club-lexus.ru

1. SPECIFICATIONS

General

Power source.....13.2V(10.5V–16.0V allowable) DC
Grounding system.....Negative type
Backup current.....0.3mA or less
Dimensions.....320(W) x145(H) x175(D)mm
Weight.....2.8kg

Cassette player

Tape.....Compact cassette tape(C30-C90)
Tape speed .....4.76cm/sec.(+0.14cm/sec., -0.05cm/sec.)
Wow and flutter.....0.2% or less(WRMS)
Crosstalk .....40dB or less
Stereo Separation.....30dB or more
S/N .....40dB or more
Distortion.....3% or less

CD player

System .....Compact disc audio system
Usable discs .....Compact disc
Signal format .....Sampling frequency : 44.1kHz
.....Number of quantization : 16;linear
S/N .....65dB or more
Distortion.....0.3% or less

FM tuner

Frequency range.....87.75, 87.9–107.9 MHz
S/N .....46dB or more(54dBμ input)
Distortion.....1.5% or less
IF interference .....80dB or more
Image interference.....35dB or more
Stereo Separation .....25dB or more(1kHz)

AM tuner

Frequency range .....530–1,710 kHz
S/N 20dB useable sensibility.....34dBμ or less
S/N .....42dB or more
Distortion.....1.5% or less
IF interference .....55dB or more
Image interference.....45dB or more

flashLAV
www.club-lexus.ru

2. EXPLODED VIEWS AND PARTS LIST

2.1 PACKING(FX-MG8227ZT-91/UC, FX-MG8327ZT-91/UC)

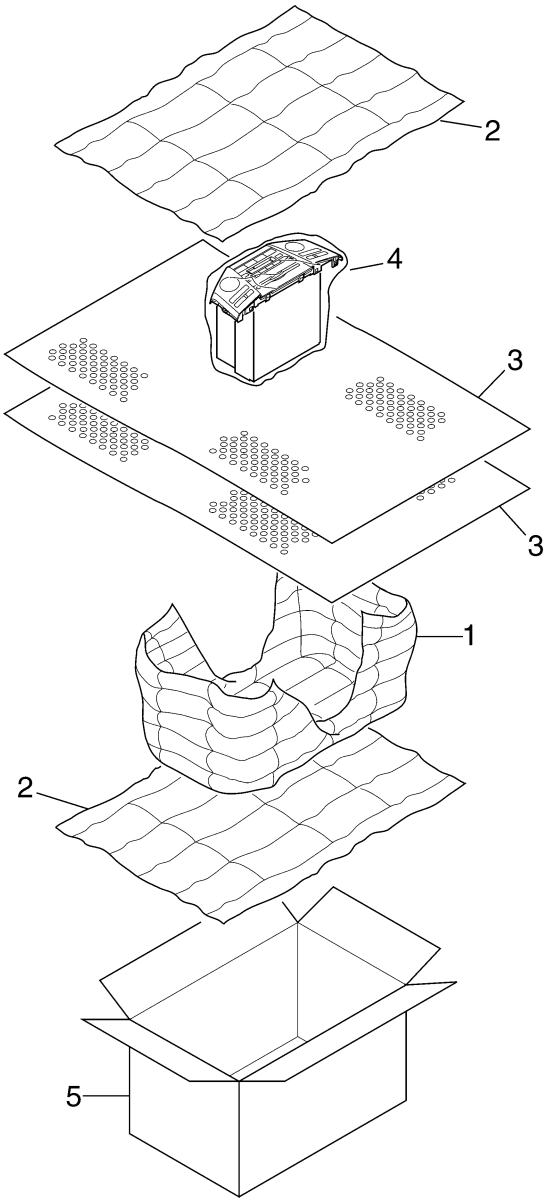

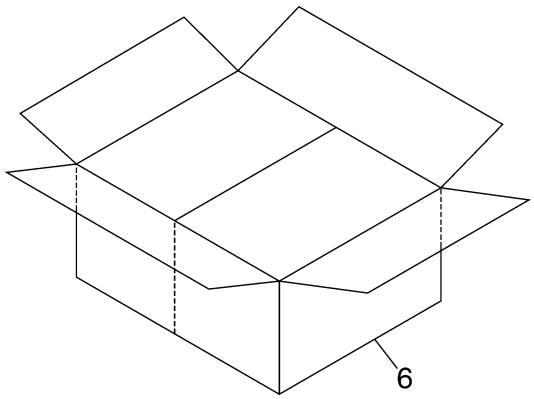

NOTE:

- Parts marked by "*" are generally unavailable because they are not in our Master Spare Parts List.
- Screws adjacent to ∇ mark on the product are used for disassembly.
- For the applying amount of lubricants or glue, follow the instructions in this manual.
  (In the case of no amount instructions, apply as you think it appropriate.)

● PACKING(FX-MG8227ZT-91/UC, FX-MG8327ZT-91/UC) SECTION PARTS LIST

Mark	No.	Description	Part No.
*	1	Air Cap	CHW1945
*	2	Air Cap	CHW1948
	3	Cover	CEG1045
	4	Polyethylene Bag	CEG1174
	5	Carton	CHG4861
	6	Contain Box	CHL4861

flashLAV
www.club-lexus.ru

2.2 EXTERIOR

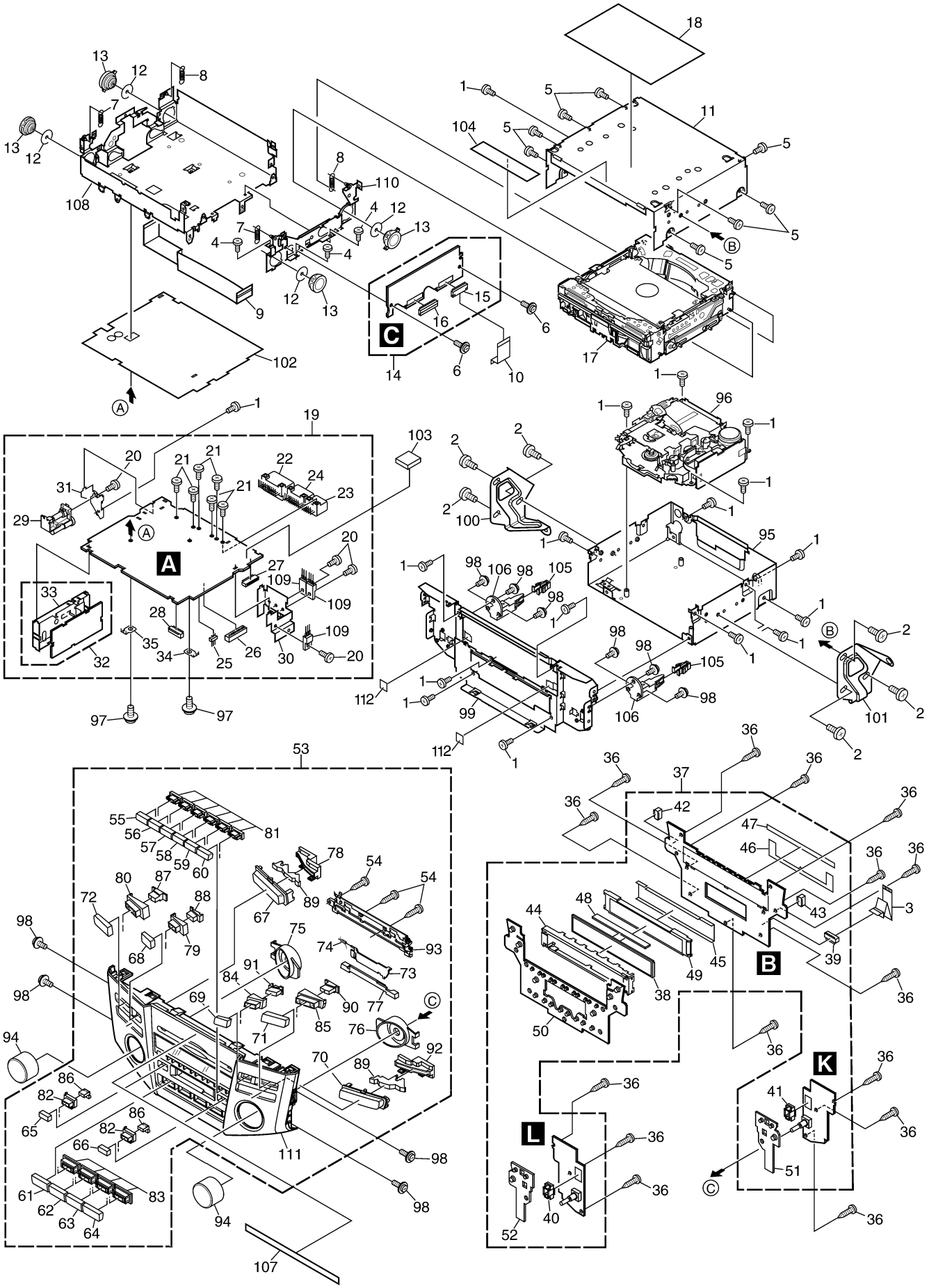

flashLAV
www.club-lexus.ru

(1) EXTERIOR SECTION PARTS LIST

Mark	No.	Description	Part No.
	1	Screw	BMZ26P040FTC
	2	Screw	See Contrast table(2)
	3	Connector	CDE7260
	4	Screw	BMZ20P025FMC
	5	Screw	BMZ26P040FMC
	6	Screw(M2x2.5)	CBA1076
	7	Spring	CBH2481
	8	Spring	CBH2482
	9	Connector	CDE7020
	10	Connector	CDE7035
	11	Case	CNB2705
	12	Sheet	CNM5981
	13	Damper	CNV6608
	14	Control Unit(G2T)	CWX2649
	15	Connector(CN601)	CKS1956
	16	Connector(CN101)	CKS4512
	17	Service Mechanism Assy(G2T)	CXX1658
	18	Label	CRW1429
	19	Main Unit	See Contrast table(2)
	20	Screw	BMZ30P060FTC
	21	Screw(M3x6)	CBA1393
	22	Connector(CN801)	CKM1322
	23	Connector(CN473)	CKM1350
	24	Connector(CN472)	CKM1351
	25	Plug(CN354)	CKS-291
	26	Connector(CN353)	CKS3568
	27	Connector(CN351)	CKS3886
	28	Connector(CN804)	CKS4361
	29	Connector(CN501)	CKX1064
	30	Holder	CNC9639
	31	Holder	CNC9701
	32	FM/AM Tuner Unit	CWE1630
	33	Holder	CNC8855
	34	Terminal(CN802)	VNF1084
	35	Terminal(CN803)	VNF1084
	36	Screw	BPZ20P080FTC
	37	Keyboard Unit	CWS1366
	38	LCD(LCD901)	CAW1722
	39	Connector(CN901)	CKS4361
	40	Connector(CN904)	CKS4591
	41	Connector(CN905)	CKS4591
	42	Connector(CN902)	CKS4592
	43	Connector(CN903)	CKS4592
	44	Holder	CND1021
	45	Sheet	CNM7958
	46	Seal	CNM7970
	47	Seal	CNM7971
	48	Connector	CNV7249
	49	Lighting Conductor	CNV7250
	50	Rubber	CNV7323
	51	Rubber	CNV7324
	52	Rubber	CNV7325
	53	Grille Assy	See Contrast table(2)
	54	Screw	BPZ20P080FTC
	55	Button(1)	CAC7599
	56	Button(2)	CAC7600
	57	Button(3)	CAC7601
	58	Button(4)	CAC7602
	59	Button(5)	CAC7603
	60	Button(6)	CAC7604
	61	Button(AM)	CAC7605
	62	Button(FM)	CAC7606
	63	Button(TAPE)	CAC7607
	64	Button(DISC)	CAC7608
	65	Button(TAPE EJECT)	CAC7609
	66	Button(TEXT)	CAC7610
	67	Button(SEEK,TRACK)	CAC7611
	68	Button(CD EJECT)	CAC7613
	69	Button(LOAD)	CAC7614
	70	Button(RDS,TRAF)	CAC7612
	71	Button(TYPE)	CAC7615
	72	Button(SCAN)	CAC7616
	73	Door	See Contrast table(2)
	74	Spring	CBH2663
	75	Lighting Conductor	CNV7251
	76	Lighting Conductor	CNV7252
	77	Lighting Conductor	CNV7253
	78	Holder	CNV7256
	79	Holder	CNV7257
	80	Holder	CNV7258
	81	Holder	CNV7259
	82	Holder	CNV7260
	83	Holder	CNV7261
	84	Holder	CNV7316
	85	Holder	CNV7317
	86	Lighting Conductor	CNV7319
	87	Lighting Conductor	CNV7320
	88	Lighting Conductor	CNV7321
	89	Lighting Conductor	CNV7330
	90	Lighting Conductor	CNV7467
	91	Lighting Conductor	CNV7469
	92	Holder	CNV7472
	93	Door Assy	CXB9033
	94	Knob Unit	CXB9458
	95	Chassis Unit	CXB9795
	96	Cassette Mechanism Module	EXK4295
	97	Screw	IMS26P040FTC
	98	Screw	IMS26P060FTC
	99	Frame	CND1789
	100	86211-48030-A	See Contrast table(2)
	101	86212-48030-A	See Contrast table(2)
	102	Insulator	CNM7496
	103	Spacer	CNM8078
	104	Seal	CNM8343
	105	90467-10203	CNV5641
	106	Guide	CNV7306
	107	Label	CRW1425
	108	Chassis Unit	CXA8029
	109	Transistor(Q809,811,812)	2SB1185
	110	Bracket Unit	CXB8082
	111	Grille Unit	See Contrast table(2)
	112	Sheet	CNM8435

flashLAV
www.club-lexus.ru

(2) CONTRAST TABLE

FX-MG8227ZT/UC, FX-MG8327ZT/UC, FX-MG8227ZT-91/UC and FX-MG8327ZT-91/UC are constructed the same except for the following:

Mark No.	Symbol and Description	Part No. FX-MG8227ZT/UC	Part No. FX-MG8327ZT/UC
2	Screw	BMZ50P080FTC	BMZ50P080FTC
19	Main Unit	CWM8385	CWM8553
53	Grille Assy	CXC2062	CXC2063
73	Door	CAT2349	CAT2350
100	86211-48030-A	CND1247	CND1247
101	86212-48030-A	CND1248	CND1248
111	Grille Unit	CXB9134	CXB9135

Mark No.	Symbol and Description	Part No. FX-MG8227ZT-91/UC	Part No. FX-MG8327ZT-91/UC
2	Screw	Not used	Not used
19	Main Unit	CWM8385	CWM8553
53	Grille Assy	CXC2062	CXC2063
73	Door	CAT2349	CAT2350
100	86211-48030-A	Not used	Not used
101	86212-48030-A	Not used	Not used
111	Grille Unit	CXB9134	CXB9135

flashLAV
www.club-lexus.ru

A

B

C

D

E

F

flashLAV
www.club-lexus.ru

2.3 CD MECHANISM UNIT(1)

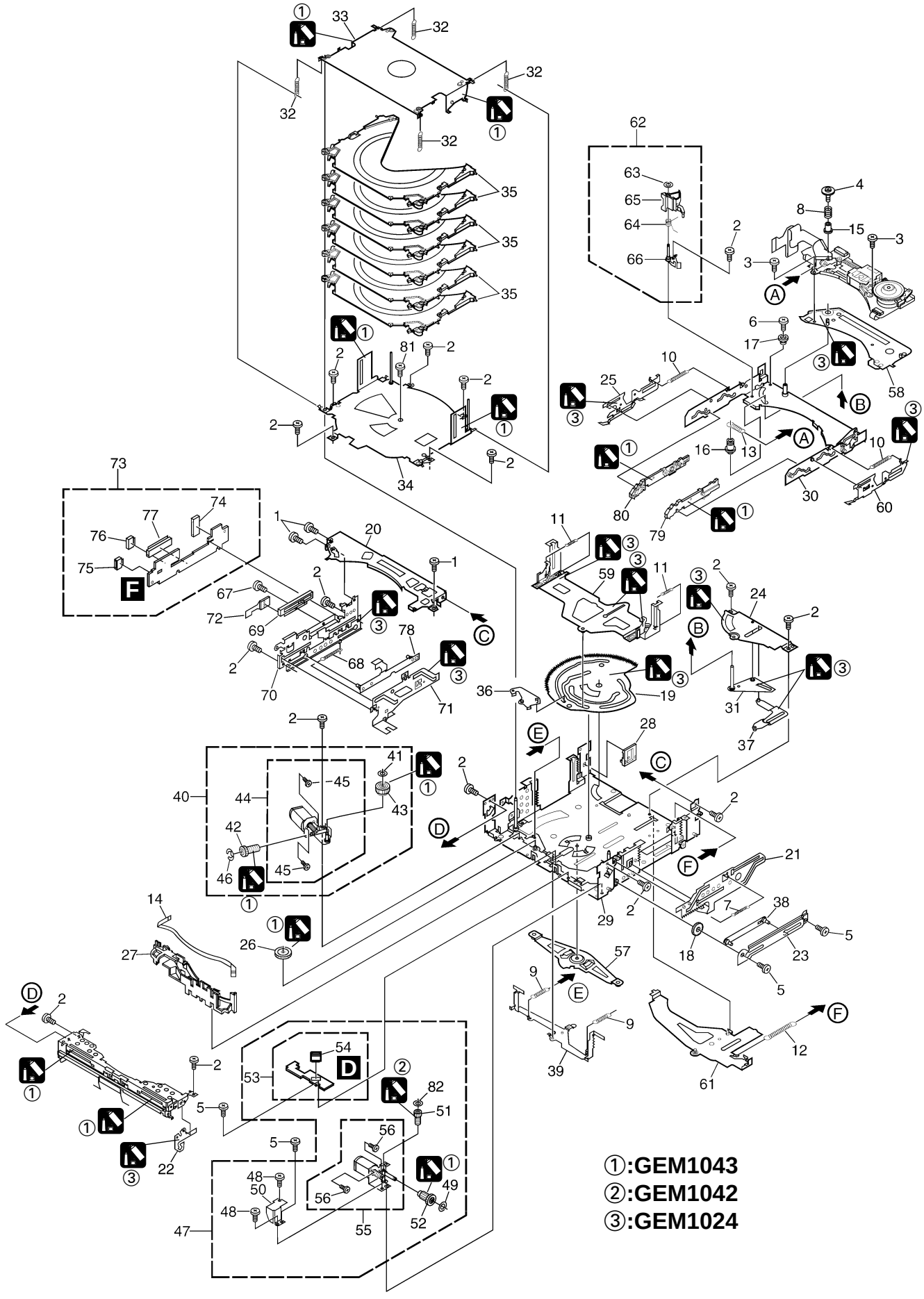

flashLAV
www.club-lexus.ru

● CD MECHANISM UNIT(1) SECTION PARTS LIST

Mark	No.	Description	Part No.
	1	Screw	BMZ20P020FZB
	2	Screw	BMZ20P025FTC
	3	Screw(M2x2)	CBA1556
	4	Screw(M2x2.5)	CBA1626
	5	Screw(M2x2.5)	CBA1609
	6	Screw(M2x4.5)	CBA1629
	7	Spring	CBH2460
	8	Spring	CBH2461
	9	Spring	CBH2484
	10	Spring	CBH2694
	11	Spring	CBH2486
	12	Spring	CBH2487
	13	Spring	CBH2500
	14	Connector	CDE6698
	15	Collar	CLA4329
	16	Collar	CLA4330
	17	Collar	CLA4331
	18	Gear	CND1649
	19	Cam Gear	CND1650
	20	Frame	CND1651
	21	Steer	CND1667
	22	Arm	CND1657
	23	Bracket	CND1658
	24	Bracket	CND1660
*	25	Lever	CNC9953
	26	Gear	CNV6612
	27	Holder	CNV6648
	28	Holder	CNV6738
*	29	Chassis Unit	CXC1642
*	30	Frame Unit	CXC1643
*	31	Arm Unit	CXC1647
	32	Spring	CBH2488
	33	Holder Unit	CXC1644
	34	Holder Unit	CXC1646
	35	Tray Unit	CXB6930
	36	Lever Unit	CXC1648
*	37	Lever Unit	CXC1649
	38	Lever Unit	CXC1650
*	39	Lever Unit	CXC1651
	40	Cam Motor Assy	CXB7522
	41	Washer	CBF1064
	42	Gear	CNV6610
	43	Gear	CNV6611
	44	Motor Unit(-A)(M1)	CXC1144
	45	Screw	JFZ20P020FTC
	46	Washer	YE20FTC
	47	ELV Motor Assy	CXB7523
	48	Screw	BMZ20P025FTC
	49	Washer	CBF1064
	50	Holder	CND1668
	51	Gear	CNV6634
	52	Gear	CNV6635
	53	PCB Unit(LED)	CWX2614
*	54	Connector(CN31)	CKS4523
	55	Motor Unit(-A)(M2)	CXC1145
	56	Screw	JFZ20P020FTC
*	57	Arm Unit	CXC1653
	58	Bracket Unit	CXC1654
*	59	Lever Unit	CXC1658
*	60	Lever Unit	CXC1659
*	61	Lever Unit	CXC1661
	62	Arm Assy	CXB8822
	63	Washer	CBF1038
	64	Spring	CBH2489
	65	Arm	CNV6735
	66	Bracket Unit	CXC1652
	67	Screw	BMZ20P025FTC
	68	Spring	CBH2459
	69	Volume(VR1)	CCW1023
	70	Bracket	CND1652
	71	Steer	CND1656
	72	Flexible PCB	CNP6368
	73	PCB Unit(SIDE)	CWX2613
	74	Connector(CN12)	CKS3991
*	75	Connector(CN14)	CKS4404
	76	Connector(CN13)	CKS4525
	77	Connector(CN11)	CKS4572
	78	Lever Unit	CXC1645
*	79	Lever Unit	CXB9121
*	80	Lever Unit	CXB9122
	81	Screw	JFZ20P020FTC
	82	Washer	CBF1037

flashLAV
www.club-lexus.ru

2.4 CD MECHANISM UNIT(2)

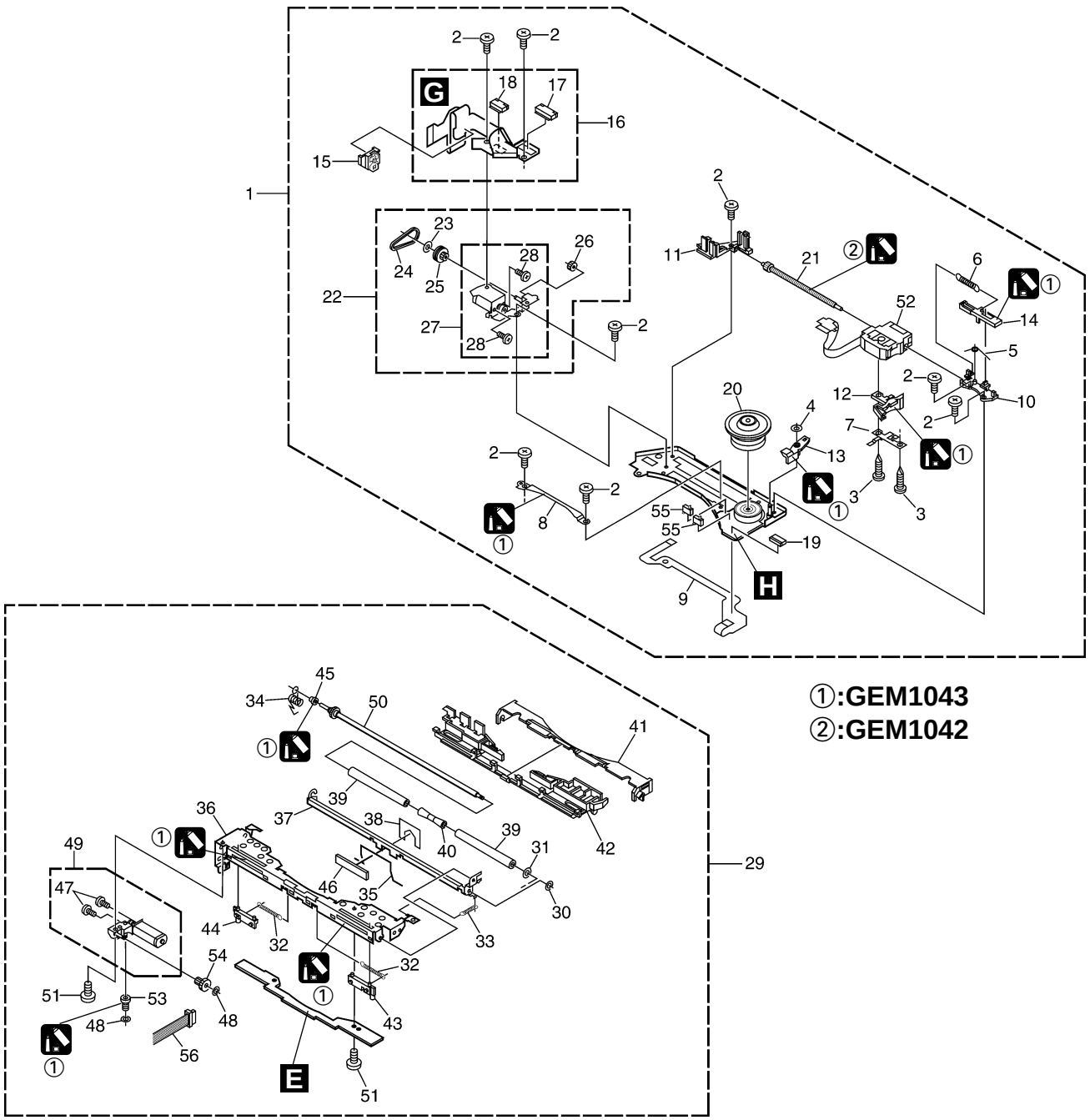

flashLAV
www.club-lexus.ru

● CD MECHANISM UNIT(2) SECTION PARTS LIST

Mark	No.	Description	Part No.
	1	Carriage Mech. Assy(G2T)	CXB8842
	2	Screw(M2x2)	CBA1556
	3	Screw(M2x6)	CBA1628
	4	Washer	CBF1038
	5	Spring	CBH2453
	6	Spring	CBH2480
	7	Spring	CBL1521
*	8	Guide	CNC9402
	9	Flexible PCB	CNP6217
	10	Holder	CNV6624
	11	Holder	CNV6625
	12	Rack	CNV6642
	13	Arm	CNV6731
	14	Lever	CNV6736
	15	Holder	CNV6737
	16	PCB Unit	CWX2611
	17	Connector(CN41)	CKS3785
	18	Connector(CN42)	CKS4508
	19	Connector(CN1)	CKS4508
	20	Support Wheel Unit	CXC1768
	21	Screw Unit(-B)	CXB7518
	22	Carriage Motor Assy	CXB7521
	23	Washer	CBF1038
	24	Belt	CNT1088
	25	Pulley	CNV6627
	26	Gear	CNV6629
	27	Motor Unit(-A)(M3)	CXC1143
	28	Screw	JFZ14P020FTC
	29	Loading Mech. Assy	CXB7525
	30	Washer	CBF1037
*	31	Washer	CBF1075
*	32	Spring	CBH2450
	33	Spring	CBH2452
*	34	Spring	CBH2457
*	35	Spring	CBH2580
*	36	Frame	CND1653
*	37	Arm	CND1654
*	38	Sheet	CNM7295
	39	Roller	CNV6616
	40	Collar	CNV6617
*	41	Guide	CNV6622
*	42	Holder	CNV6636
*	43	Lever	CNV6732
*	44	Lever	CNV6733
	45	Collar	CNV6734

Mark	No.	Description	Part No.
*	46	Holder	CNV7144
	47	Screw	JFZ12P018FTC
	48	Washer	CBF1037
*	49	Motor Unit(-A)	CXC1146
	50	Shaft Unit(-C)	CXB7528
	51	Screw	JFZ20P020FTC
	52	PU Unit(PX1)(Service)	CXX1569
*	53	Gear	CNV6620
*	54	Gear	CNV6621
	55	Switch(S1,2)	CSN1057
*	56	Connector	CDE6674

flashLAV
www.club-lexus.ru

2.5 CASSETTE MECHANISM MODULE

For grease application, refer to the service manual for CX-1011 (CRT2406)

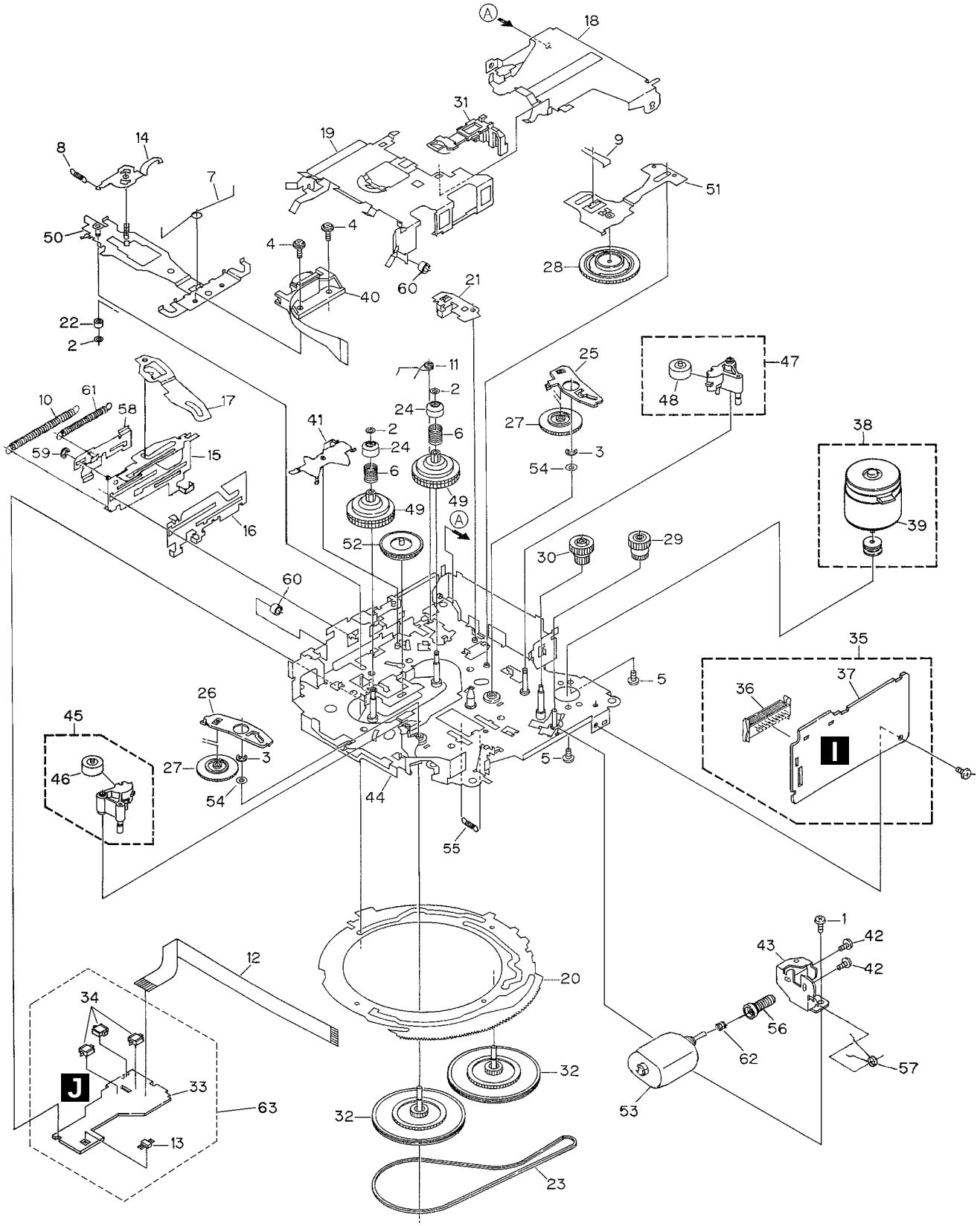

flashLAV
www.club-lexus.ru

● CASSETTE MECHANISM MODULE SECTION PARTS LIST

Mark No.	Description	Part No.
1	Screw	BSZ20P040FMC
2	Washer	CBF1037
3	Washer	CBG1003
4	Screw	EBA1028
5	Screw	CBA1037
6	Spring	EBH1653
7	Spring	EBH1642
8	Spring	EBH1641
9	Spring	EBH1626
10	Spring	EBH1627
11	Spring	EBH1648
12	Cord	EDD1024
13	Photo-reflector(Q101)	EGN1004
14	Arm	ENC1526
15	Lever Unit	EXA1610
16	Lever	ENC1543
17	Arm	ENC1532
18	Frame	ENC1533
19	Holder	ENC1547
20	Gear	ENC1535
21	Arm	ENC1550
22	Roller	ENR1040
23	Belt	ENT1027
24	Collar	ENV1508
25	Arm	ENV1539
26	Arm	ENV1540
27	Gear	ENV1569
28	Gear	ENV1547
29	Gear	ENR1044
30	Worm Wheel	ENV1559
31	Lever	ENV1551
32	Flywheel	ENV1554
33	Gathering PCB	ENX1073
34	Switch(S101,S102,S103)	ESG1007
35	Deck Unit	EWM1043
36	Plug(CN251)	CKS3540
37	Gathering PCB	ENX1076
38	Motor Unit(M1)	EXA1618
39	Motor	EXM1035
40	Head Assy(HD1)	EXA1594
41	Arm	ENC1537
42	Screw	JGZ20P025FNI
43	Bracket	ENC1559
44	Chassis Unit	EXA1636
45	Pinch Holder Unit	EXA1608
46	Pinch Roller	ENV1518
47	Pinch Holder Unit	EXA1607
48	Pinch Roller	ENV1518
49	Reel Unit	EXA1625
50	Head Base Unit	EXA1611
51	Lever Unit	EXA1587
52	Gear Unit	EXA1596
53	Motor Unit(M2)	EXA1623
54	Washer	HBF-179
55	Spring	EBH1537
56	Worm Gear	ENV1564
57	Spring	EBH1655
58	Lever	ENC1548
59	Washer	YE15FUC
60	Tube	ENM1039
61	Spring	EBH1645
62	Spring	EBH1545
63	Sensor Unit	EWM1041

flashLAV
www.club-lexus.ru

A

B

C

D

E

F

flashLAV
www.club-lexus.ru

3. BLOCK DIAGRAM AND SCHEMATIC DIAGRAM

3.1 BLOCK DIAGRAM(1)

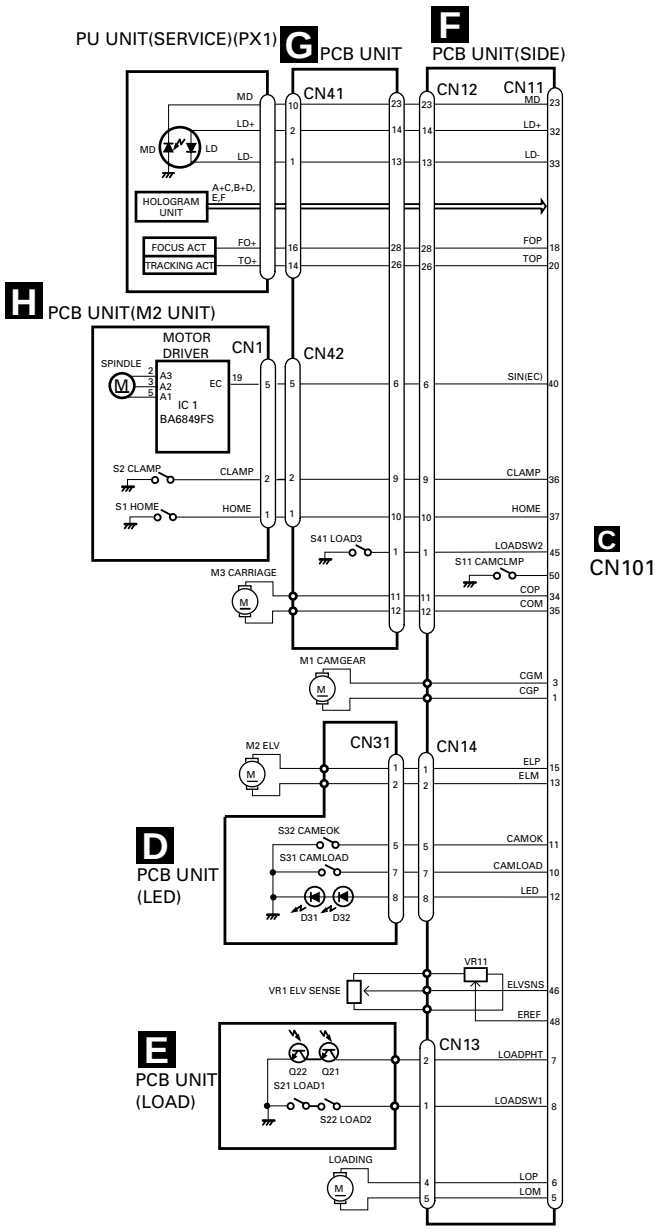

flashLAV
www.club-lexus.ru

3.2 BLOCK DIAGRAM(2)

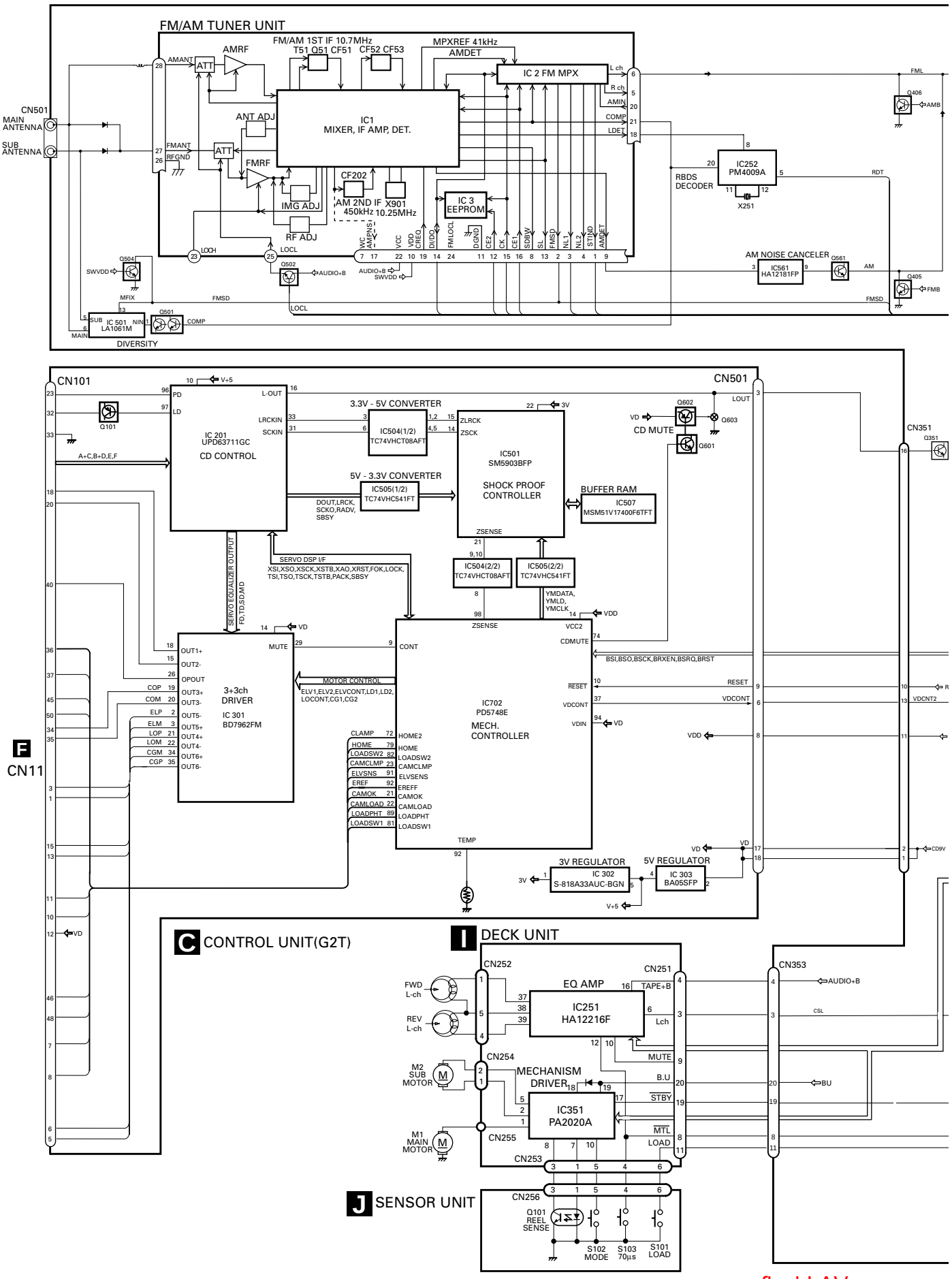

flashLAV
www.club-lexus.ru

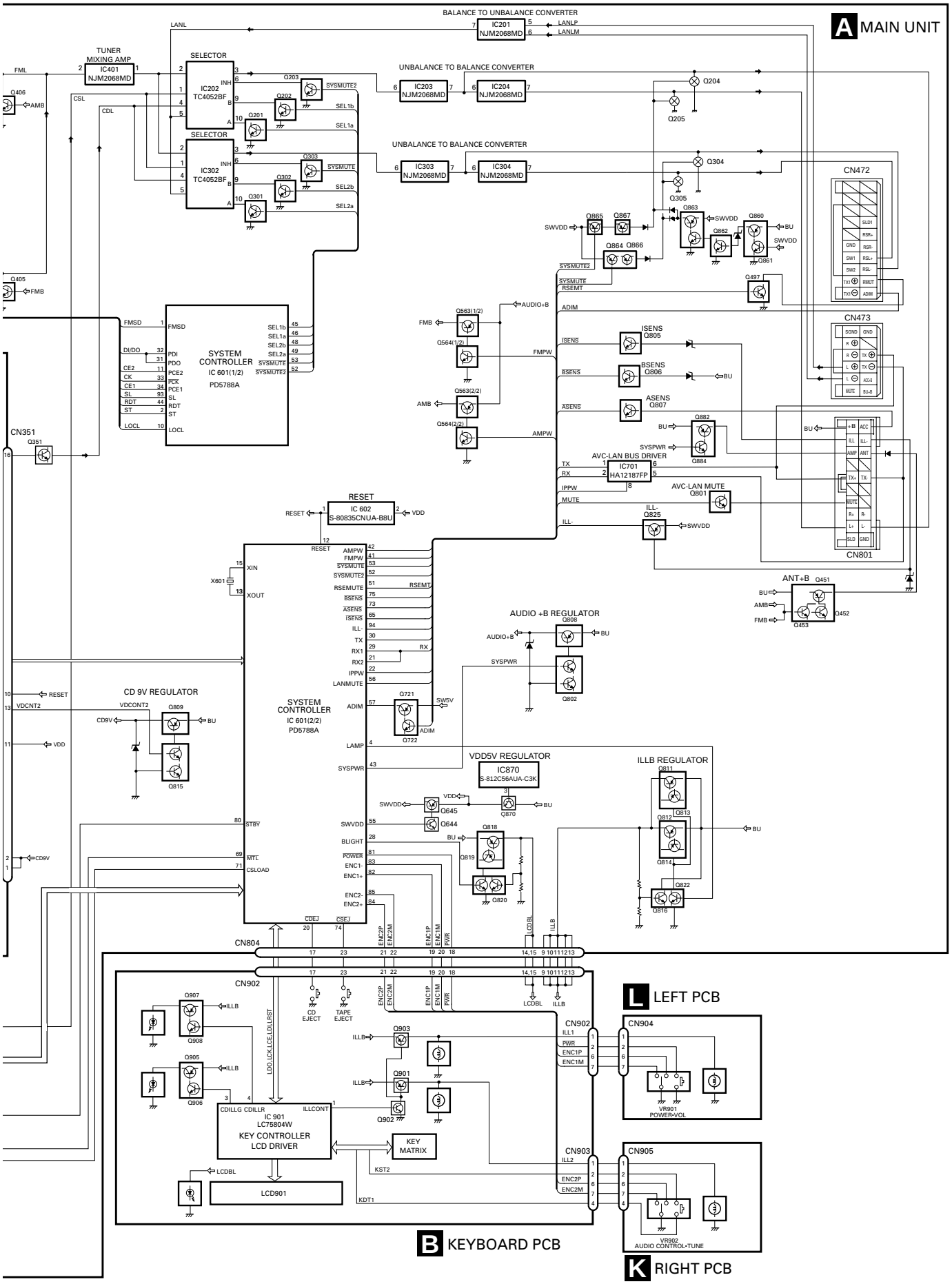

flashLAV
www.club-lexus.ru

3.3 OVERALL CONNECTION DIAGRAM(GUIDE PAGE)

Note: When ordering service parts, be sure to refer to " EXPLODED VIEWS AND PARTS LIST" or "ELECTRICAL PARTS LIST".

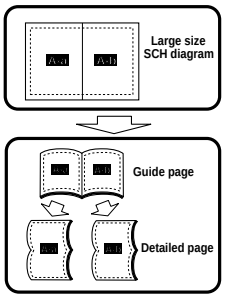

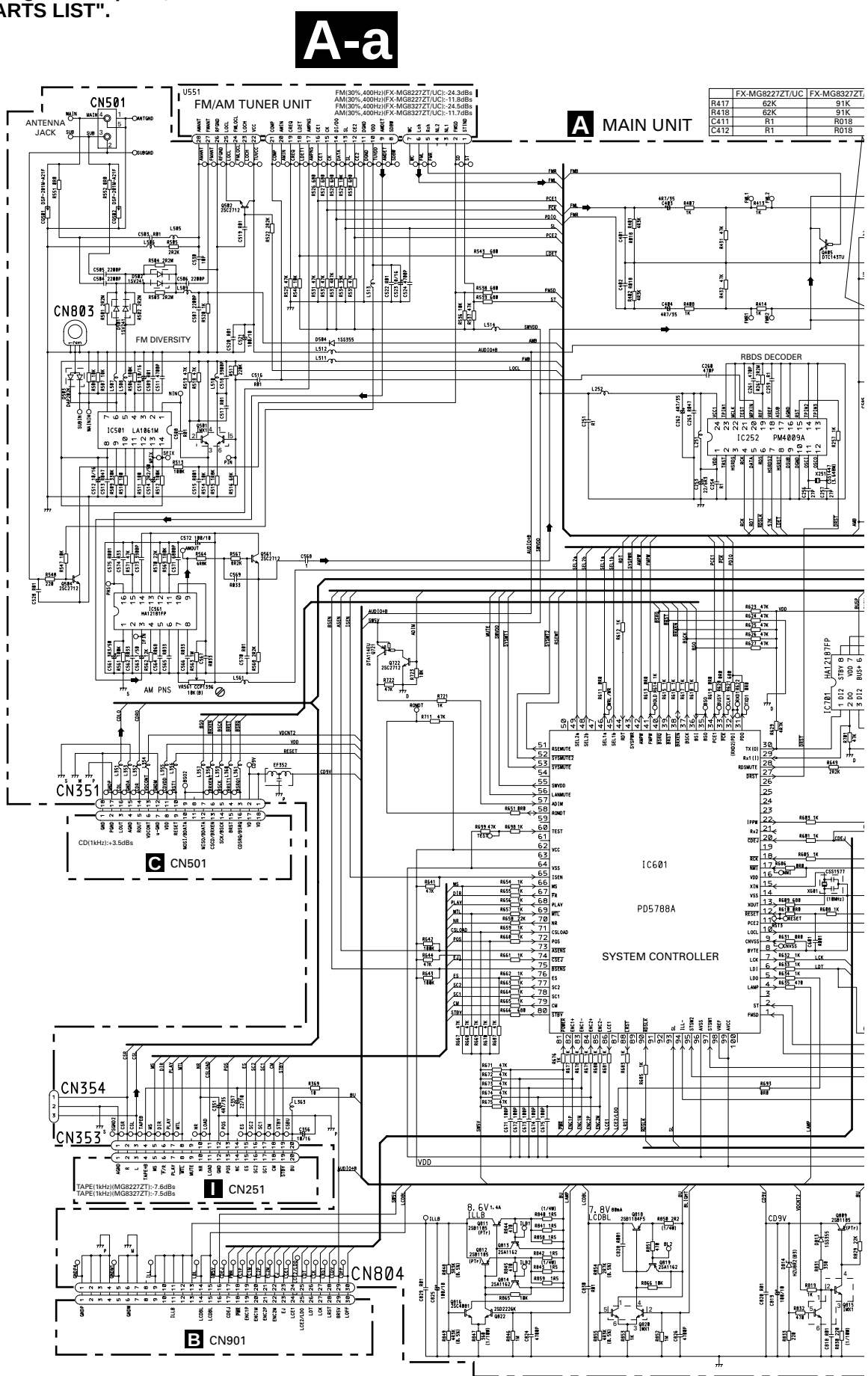

	FX-MG8227ZT/UC	FX-MG8327ZT
R417	62K	91K
R418	62K	91K
C411	R1	R018
C412	R1	R018

flashLAV
www.club-lexus.ru

A-b

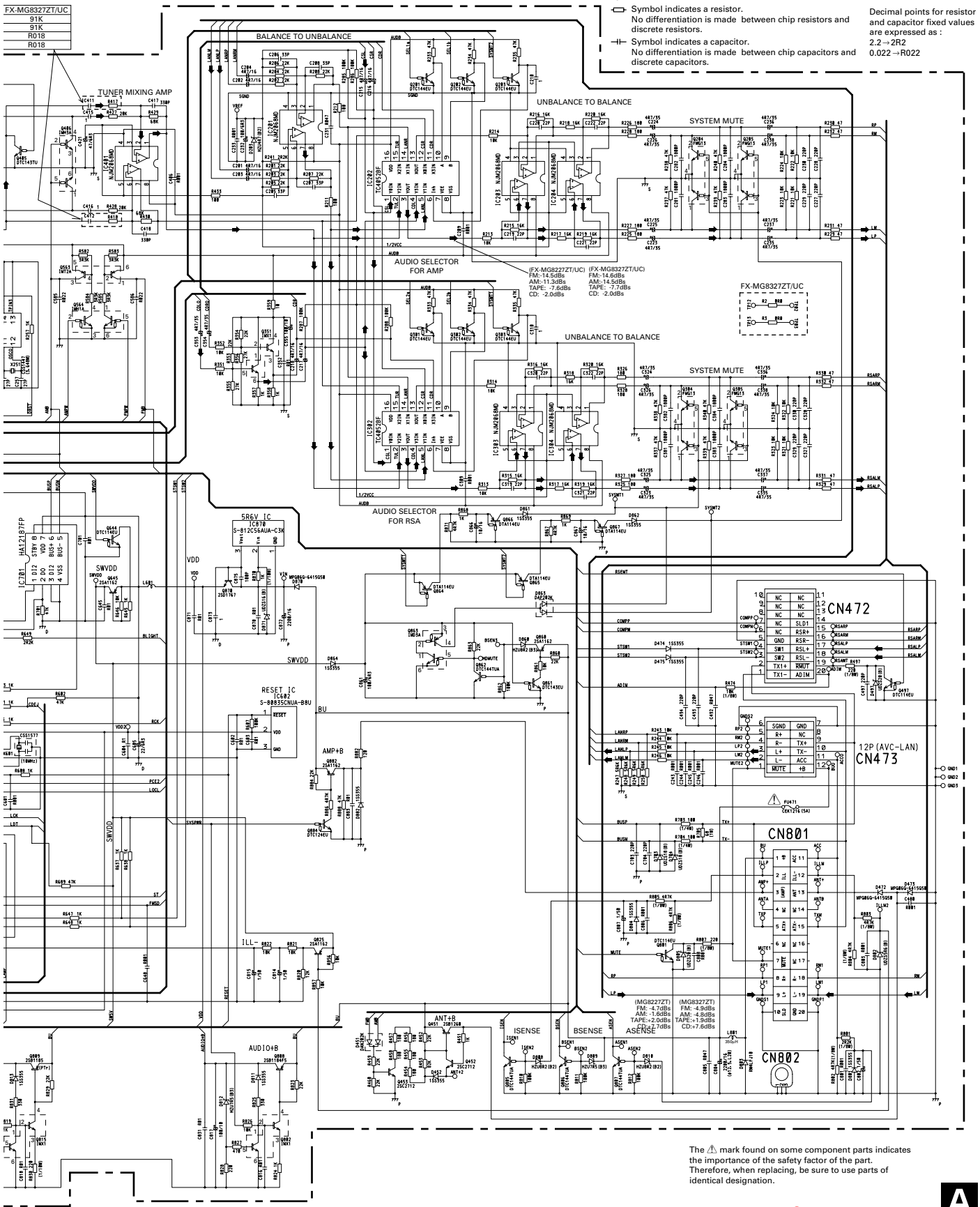

The ⚠ mark found on some component parts indicates the importance of the safety factor of the part. Therefore, when replacing, be sure to use parts of identical designation.

flashLAV
www.club-lexus.ru

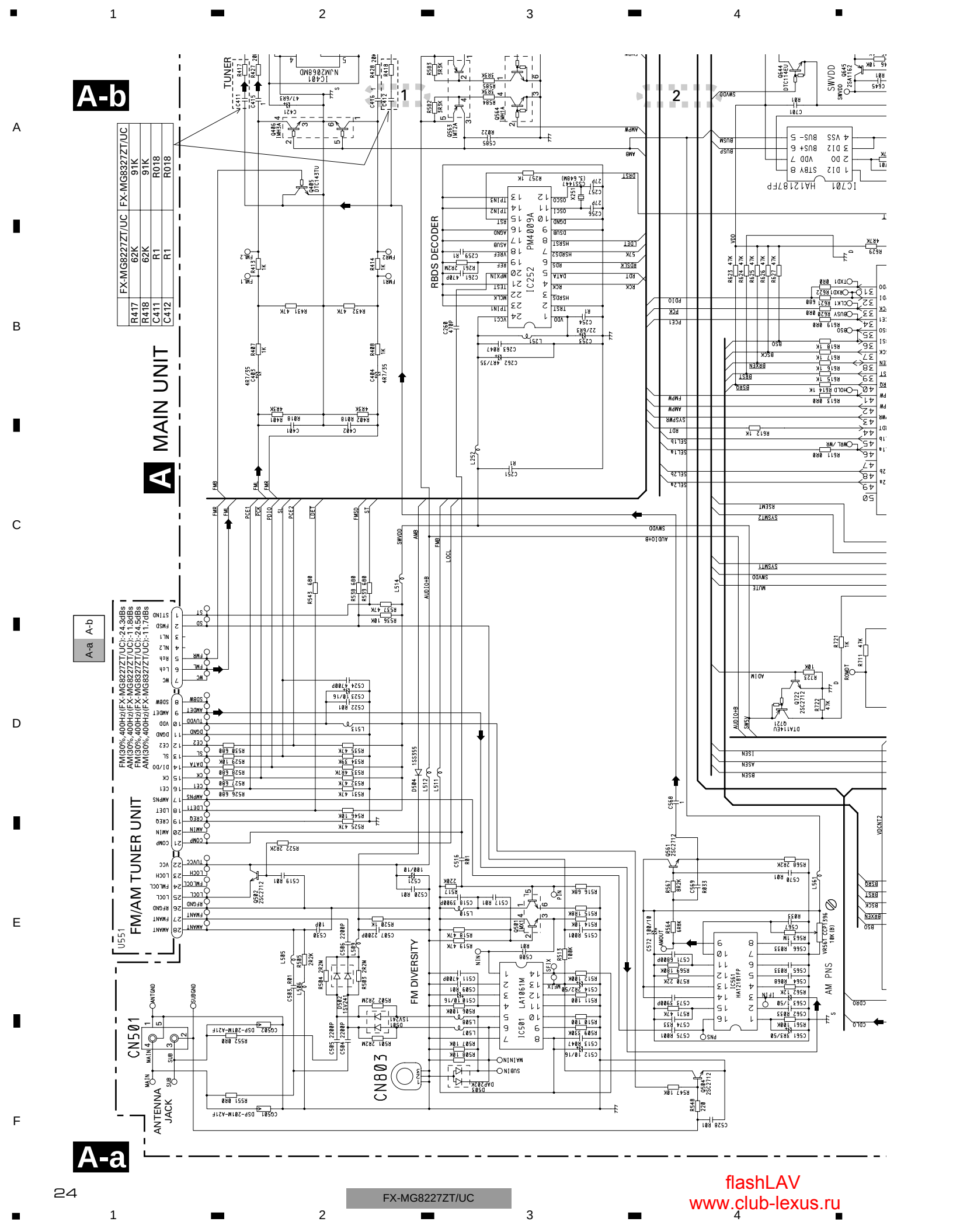

flashLAV
www.club-lexus.ru

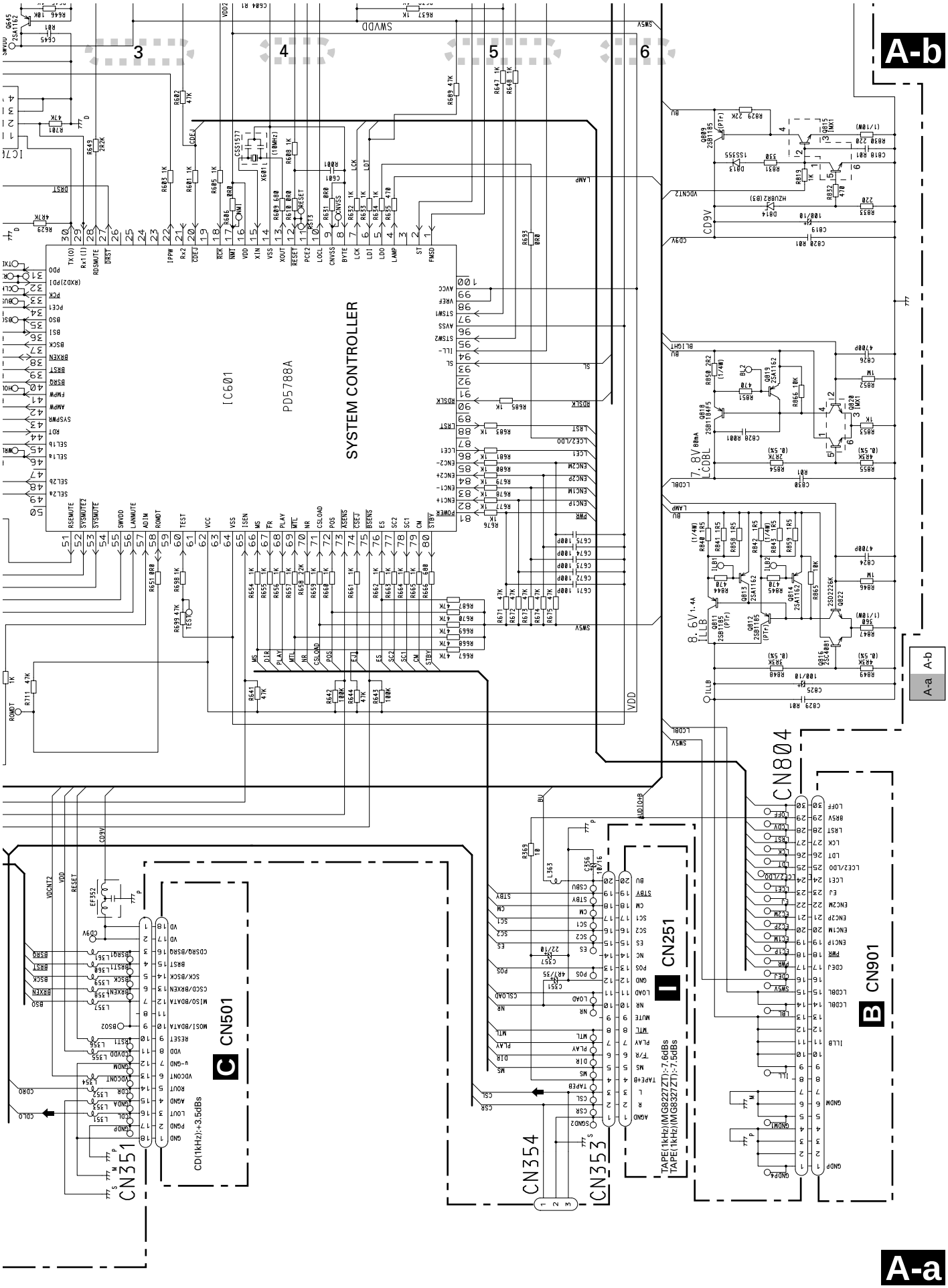

flashLAV
www.club-lexus.ru

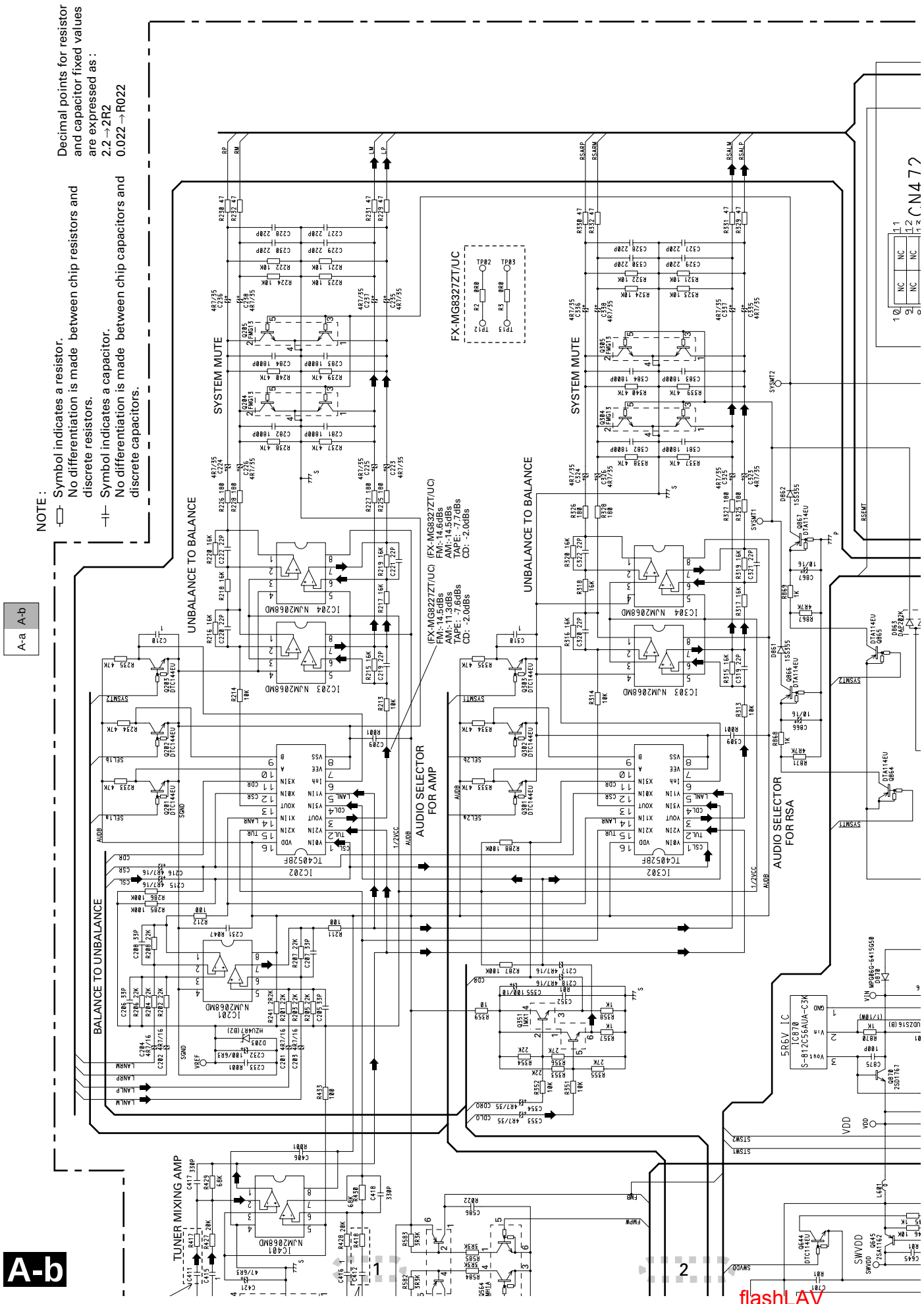
NOTE :
Symbol indicates a resistor.
No differentiation is made between chip resistors and discrete resistors.
Symbol indicates a capacitor.
No differentiation is made between chip capacitors and discrete capacitors.
Decimal points for resistor and capacitor fixed values are expressed as :
2.2→2R2
0.022→R022
A-b
A-a
SYSTEM MUTE
UNBALANCE TO BALANCE
AUDIO SELECTOR FOR AMP
AUDIO SELECTOR FOR RSA
BALANCE TO UNBALANCE
TUNER MIXING AMP
FX-MG8327ZT/UC
(FX-MG8227ZT/UC) FM:-14.5dBs AM:-11.3dBs TAPE: -7.6dBs CD: -2.0dBs
(FX-MG8327ZT/UC) (FX-MG8227ZT/UC) FM:-14.6dBs AM:-14.5dBs TAPE: -7.7dBs CD: -2.0dBs
IC202 TC4052BF
IC201 NJM2068MD
IC203 NJM2068MD
IC204 NJM2068MD
IC401 NJM2068MD
IC302 TC4052BF
IC303 NJM2068MD
IC304 NJM2068MD
5R6V IC
IC870
S-812C56AUA-C3K
CN472
FLASH MEMORY
MCR68G-64150S8
SWVDD
VDD
SYSMT1
SYSMT2
RSEMT
SYSMT
SYSMT2
SYSMT1
SYSMT
SYSMT2
SYSMT1
SYSMT
SYSMT2
SYSMT1

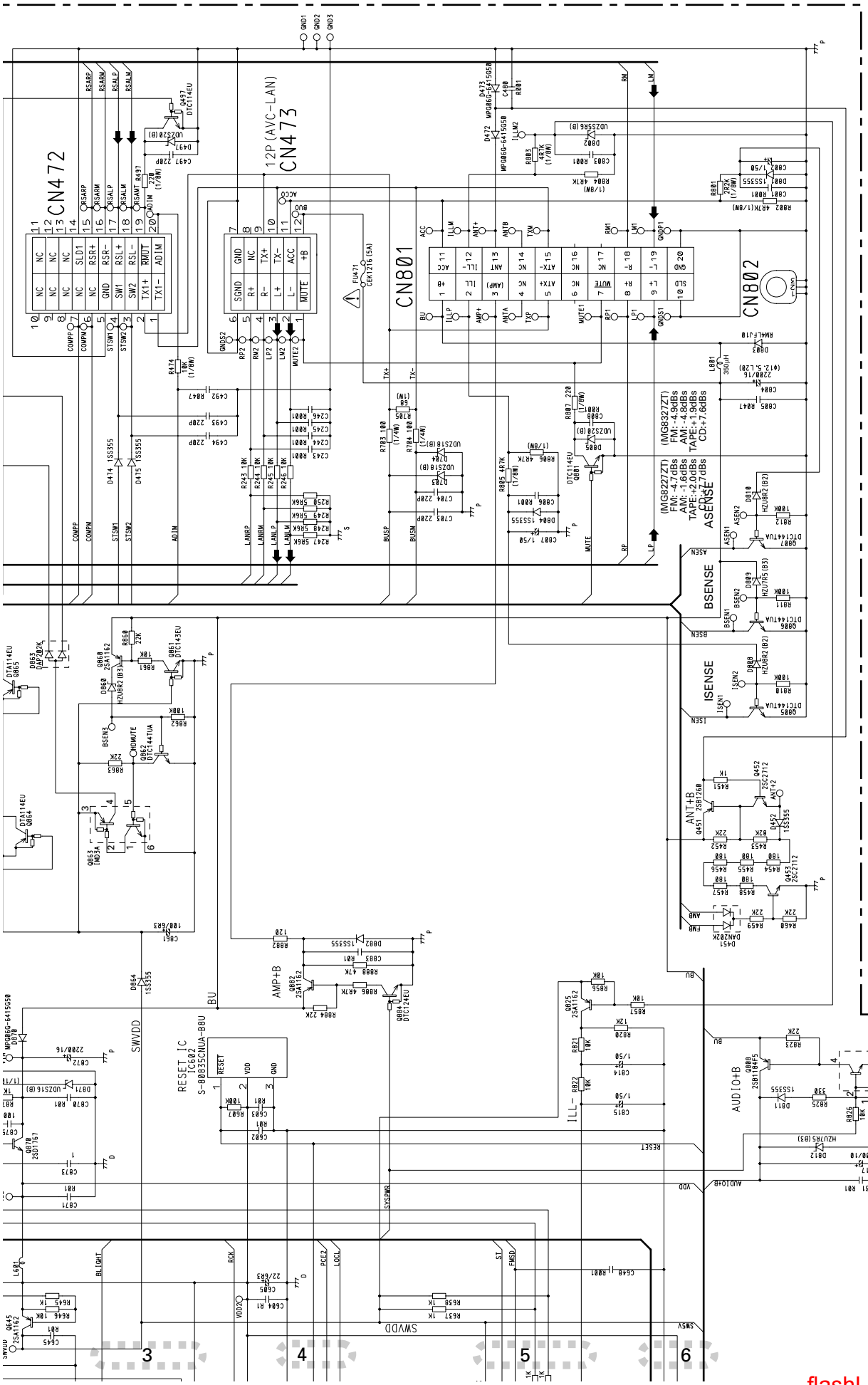

The ⚠ mark found on some component parts indicates the importance of the safety factor of the part. Therefore, when replacing, be sure to use parts of identical designation.

A-b
A-a

A-b

flashLAV
www.club-lexus.ru

3.4 KEYBOARD UNIT

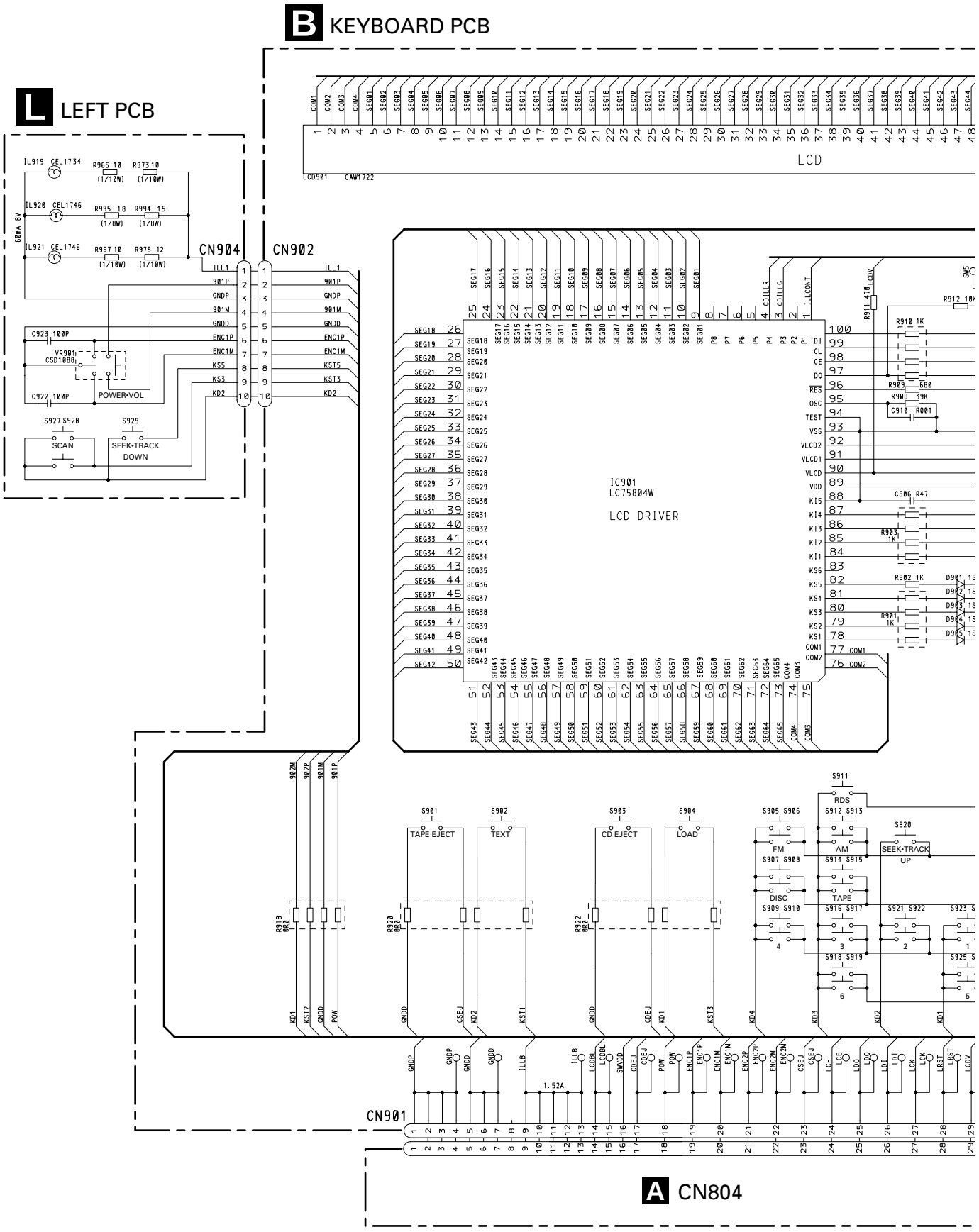

flashLAV
www.club-lexus.ru

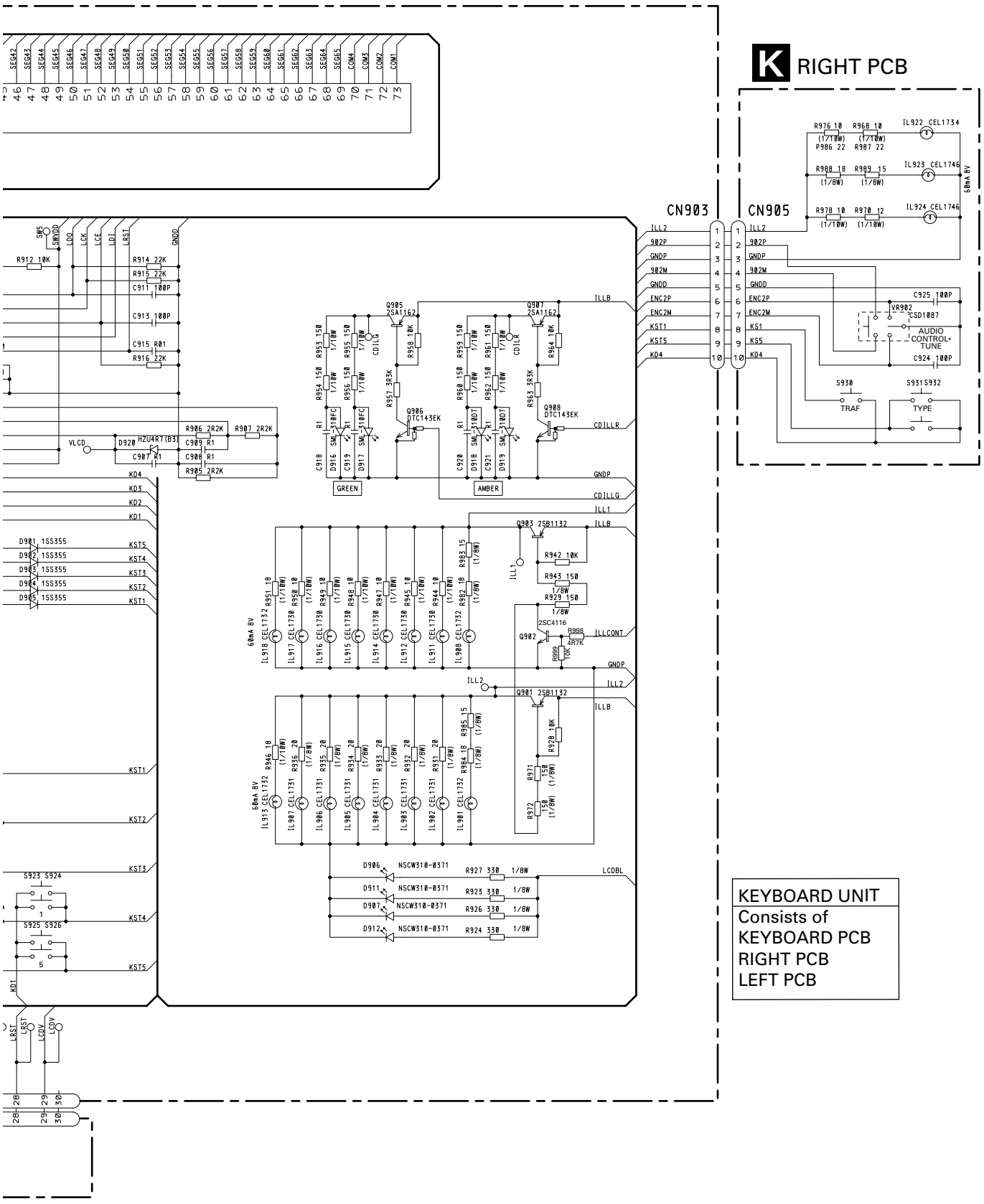

flashLAV
www.club-lexus.ru

3.5 CD MECHANISM MODULE(GUIDE PAGE)

C-a

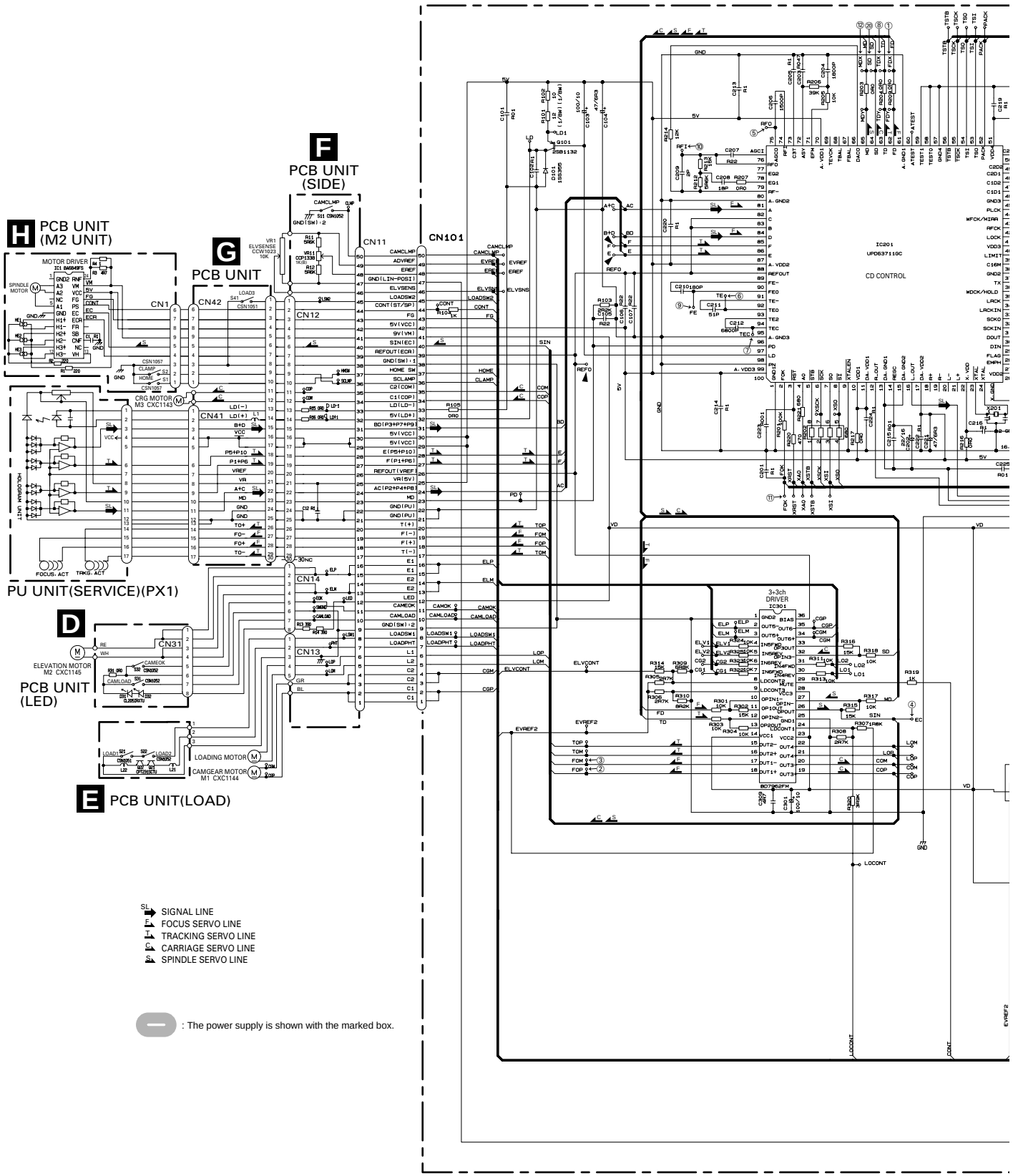

flashLAV
www.club-lexus.ru

C-b

C CONTROL UNIT(G2T)

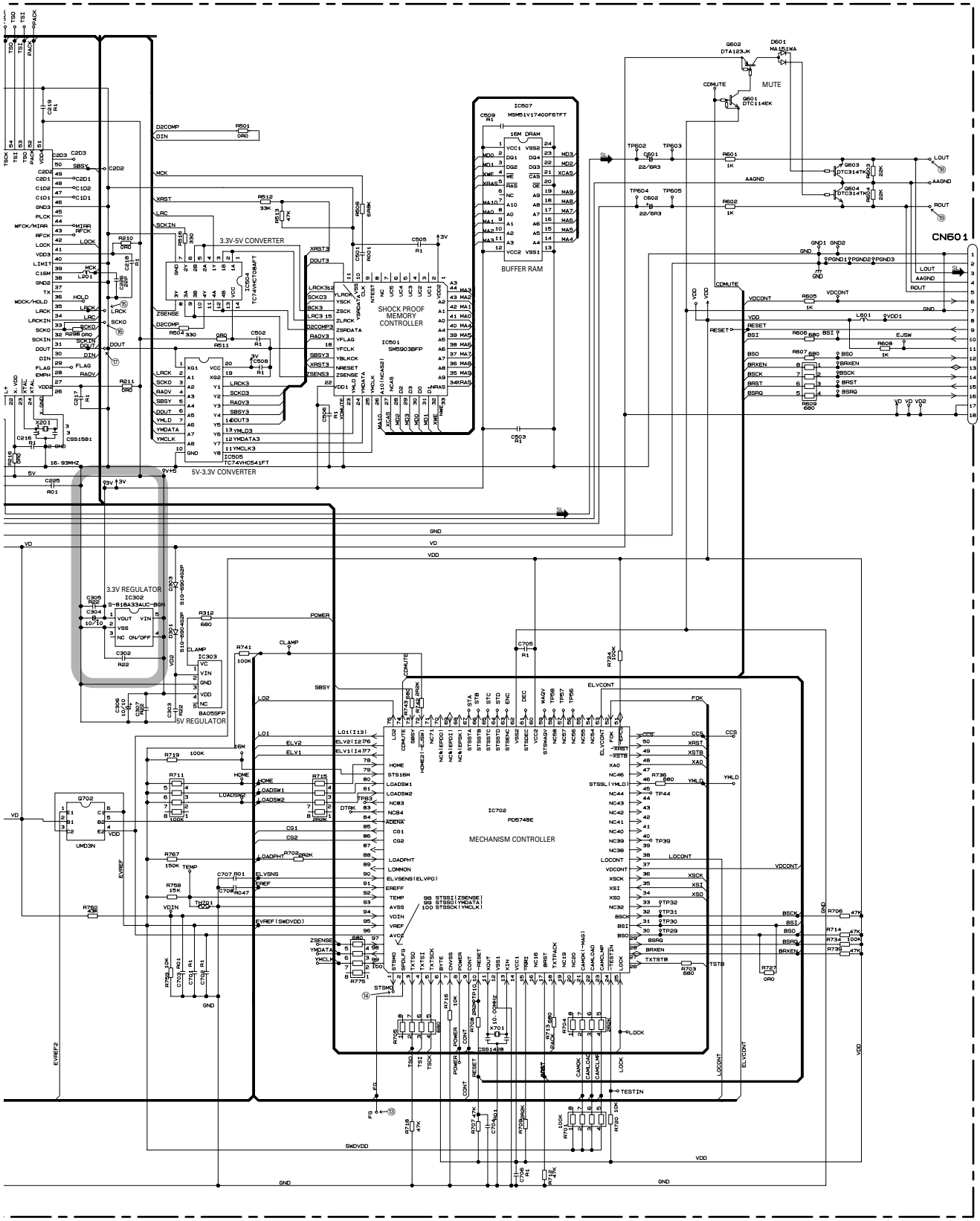

flashLAV
www.club-lexus.ru

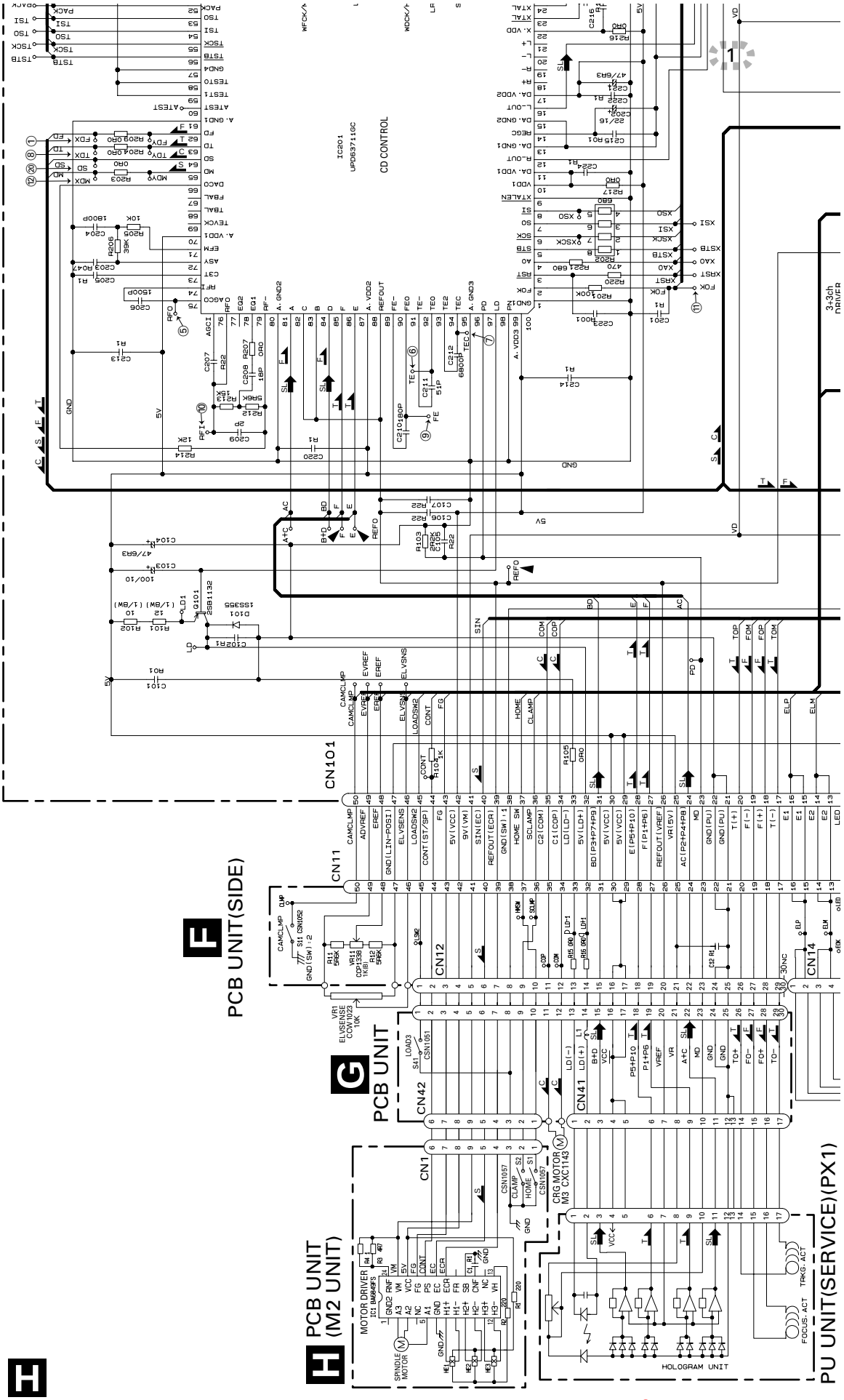

C-a C-b

flashLAV
www.club-lexus.ru

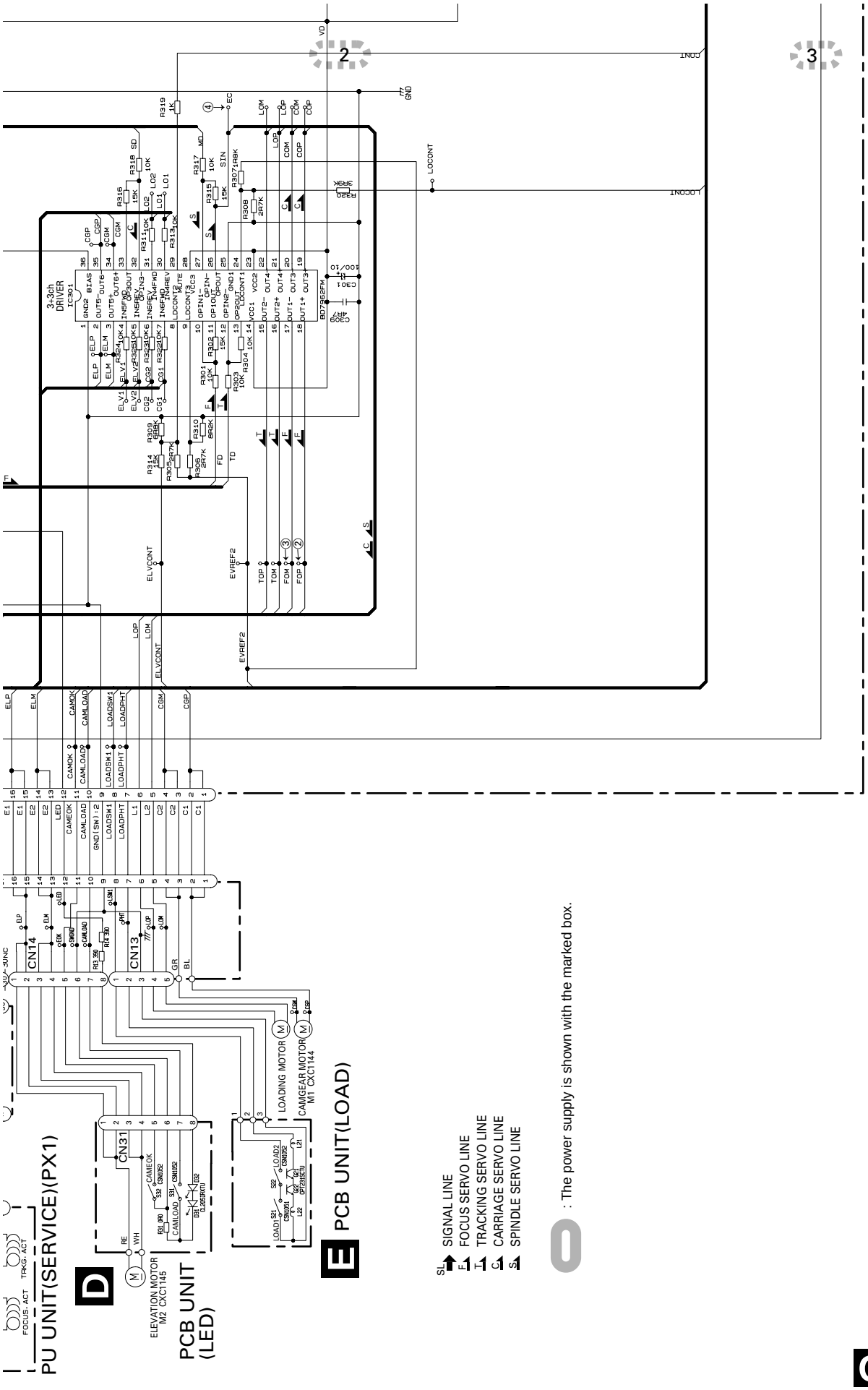

C-b

C-a C-b

C-a D E

flashLAV
www.club-lexus.ru

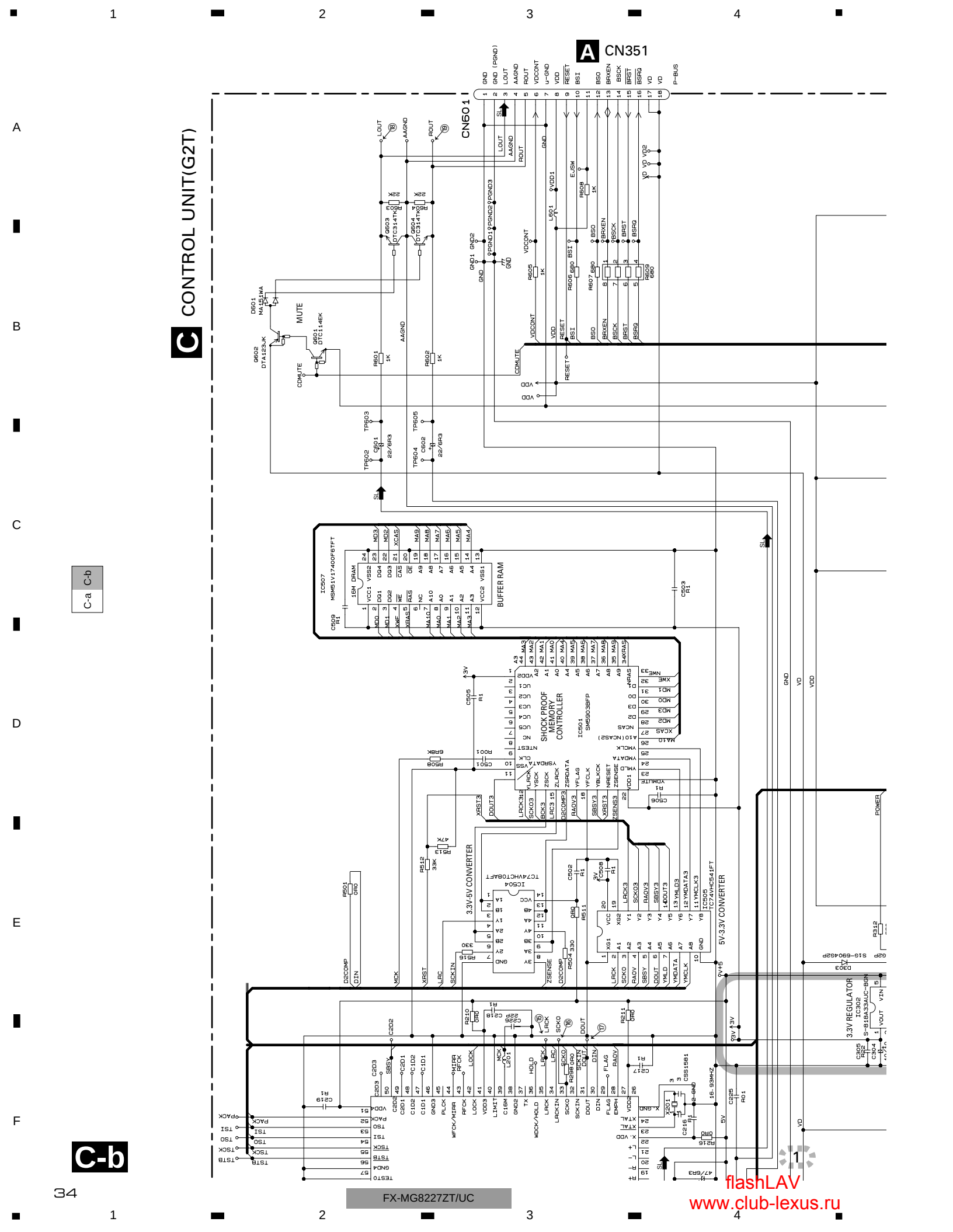
A CN351
CN601
C CONTROL UNIT(G2T)
C-a C-b
C-b
MUTE
BUFFER RAM
SHOCK PROOF MEMORY CONTROLLER
3.3V-5V CONVERTER
5V-3.3V CONVERTER
3.3V REGULATOR
POWER
flashLAV
www.club-lexus.ru

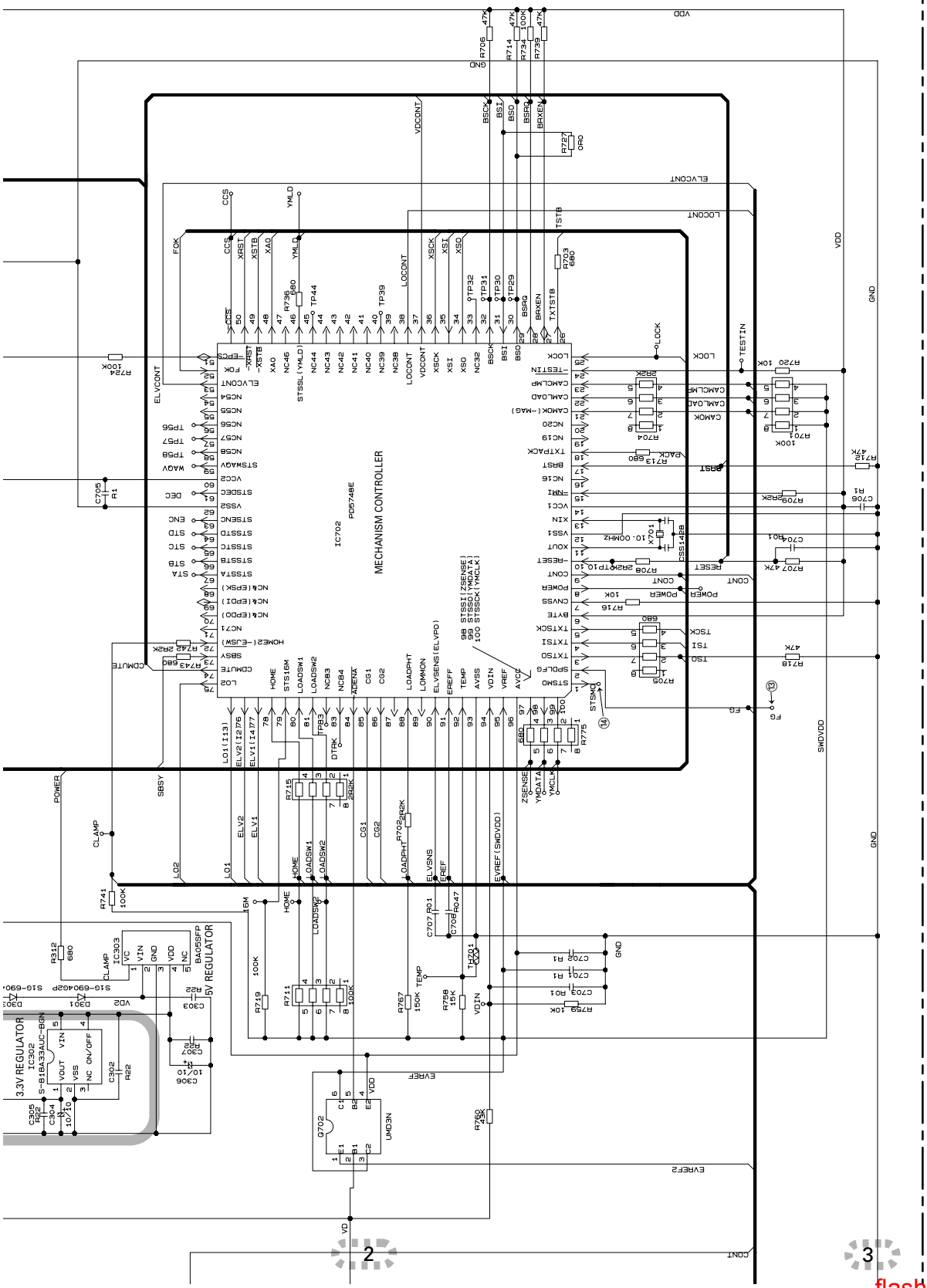

flashLAV
www.club-lexus.ru

Note: The encircled numbers denote measuring points in the circuit diagram.

CH1 : ① FDX Mode:Test
CH2 : ② FOP
CH3 : ③ FOM
CH4 : ④ EC
Focus search mode

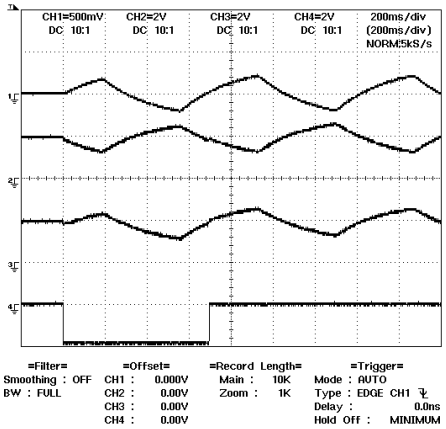

CH1 : ⑤ RFO Mode:Test
CH2 : ⑥ TE
CH3 : ⑦ TEC

Tracking open

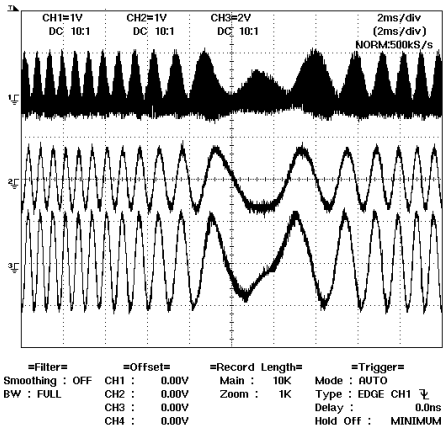

CH1 : ⑤ RFO Mode:Test
CH2 : ⑥ TE
CH3 : ⑧ TDX

1 Track Jump

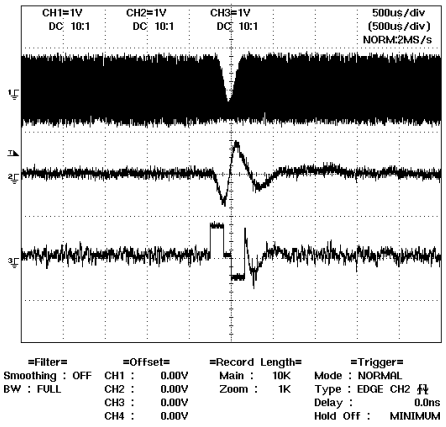

CH1 : ⑤ RFO Mode:Test
CH2 : ⑥ TE
CH3 : ⑧ TDX

4 Track Jump

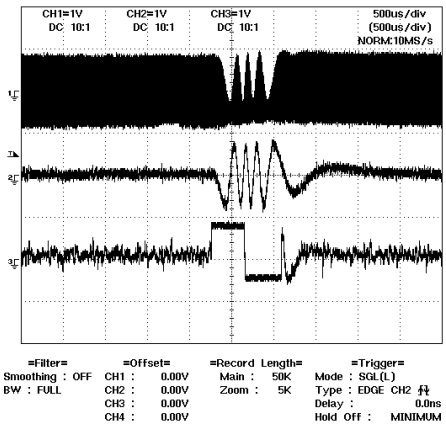

CH1 : ⑤ RFO Mode:Test
CH2 : ⑥ TE
CH3 : ⑧ TDX

10 Track Jump

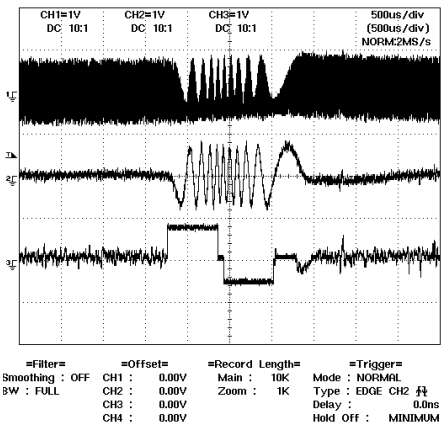

CH1 : ⑤ RFO Mode:Test
CH2 : ⑥ TE
CH3 : ⑧ TDX

32 Track Jump

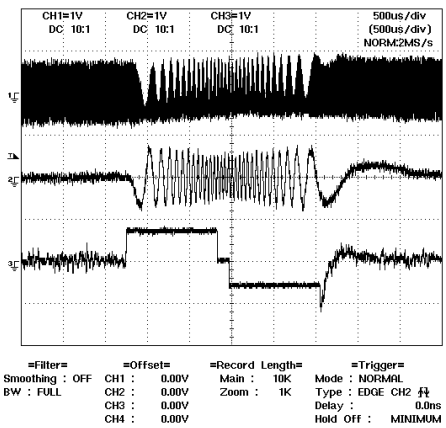

flashLAV
www.club-lexus.ru

CH1 : ⑥ TE Mode:Normal
CH2 : ⑨ FE
CH3 : ⑩ RFI

Focus close

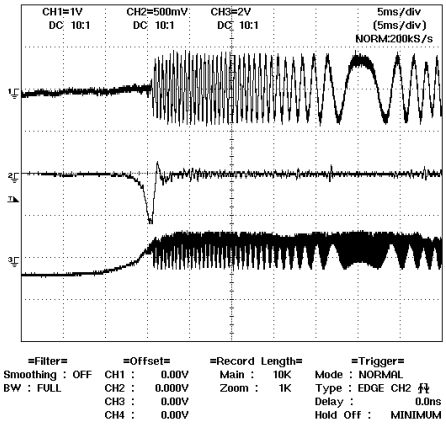

CH1 : ⑭ STSMO Mode:Normal
CH2 : ⑥ TE

Memory capacity (remaining) at the starting of PLAY

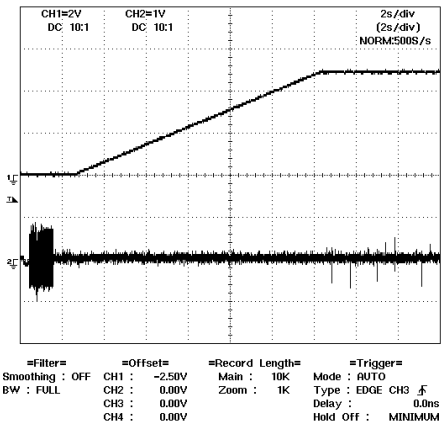

CH1 : ⑭ RFO Mode:Normal
CH2 : ⑥ TE

Memory capacity (remaining) during PLAY

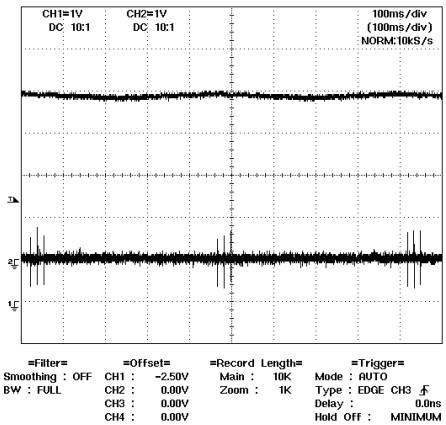

CH1 : ① FDX Mode:Normal
CH2 : ⑪ FOK
CH3 : ⑫ MDX
CH4 : ⑬ FG
Setup

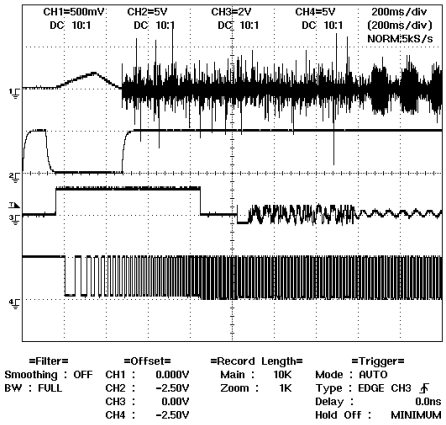

CH1 : ⑨ FE Mode:Normal
CH2 : ① FDX
CH3 : ⑥ TE
CH4 : ⑧ TDX
During "Play"

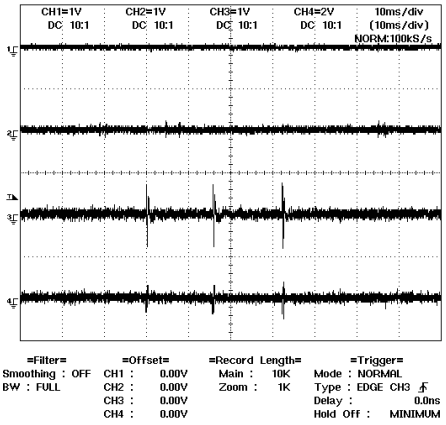

CH1 : ⑮ LRCK Mode:Normal
CH2 : ⑯ SCKO
CH3 : ⑰ DOUT

Digital audio data(x2 speed)

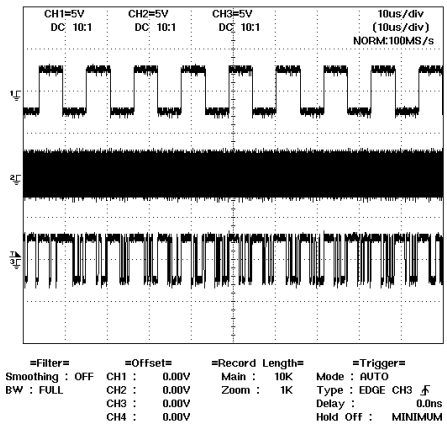

flashLAV
www.club-lexus.ru

CH1 : ⑱ LOUT Mode:Normal
CH2 : ⑲ ROUT

Audio output(1kHz , 0dB)

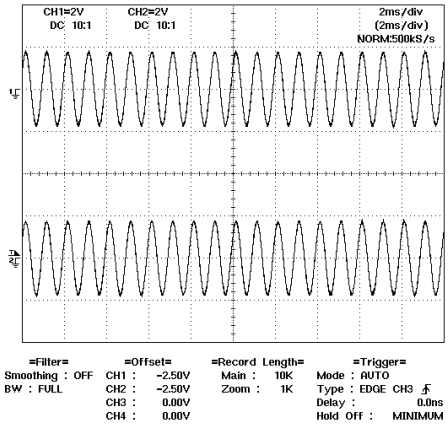

CH1 : ⑥ TE Mode:Normal
CH2 : ⑧ TDX
CH3 : ⑳ SD
CH4 : ④ EC
During inside / outside search

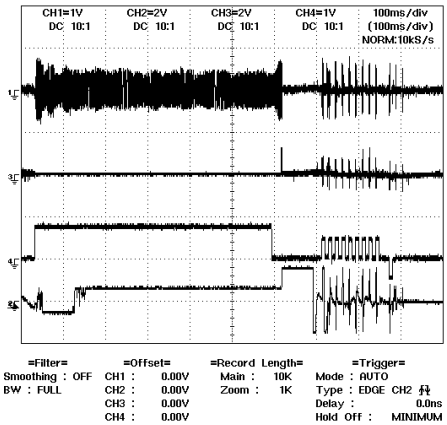

CH1 : ① FDX Mode:Normal
CH2 : ⑪ FOK
CH3 : ⑫ MDX
CH4 : ⑬ FG
DISC stop

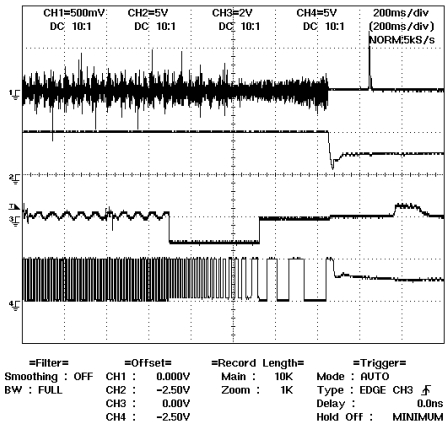

flashLAV
www.club-lexus.ru

A

B

C

D

E

F

flashLAV
www.club-lexus.ru

3.6 CASSETTE MECHANISM MODULE

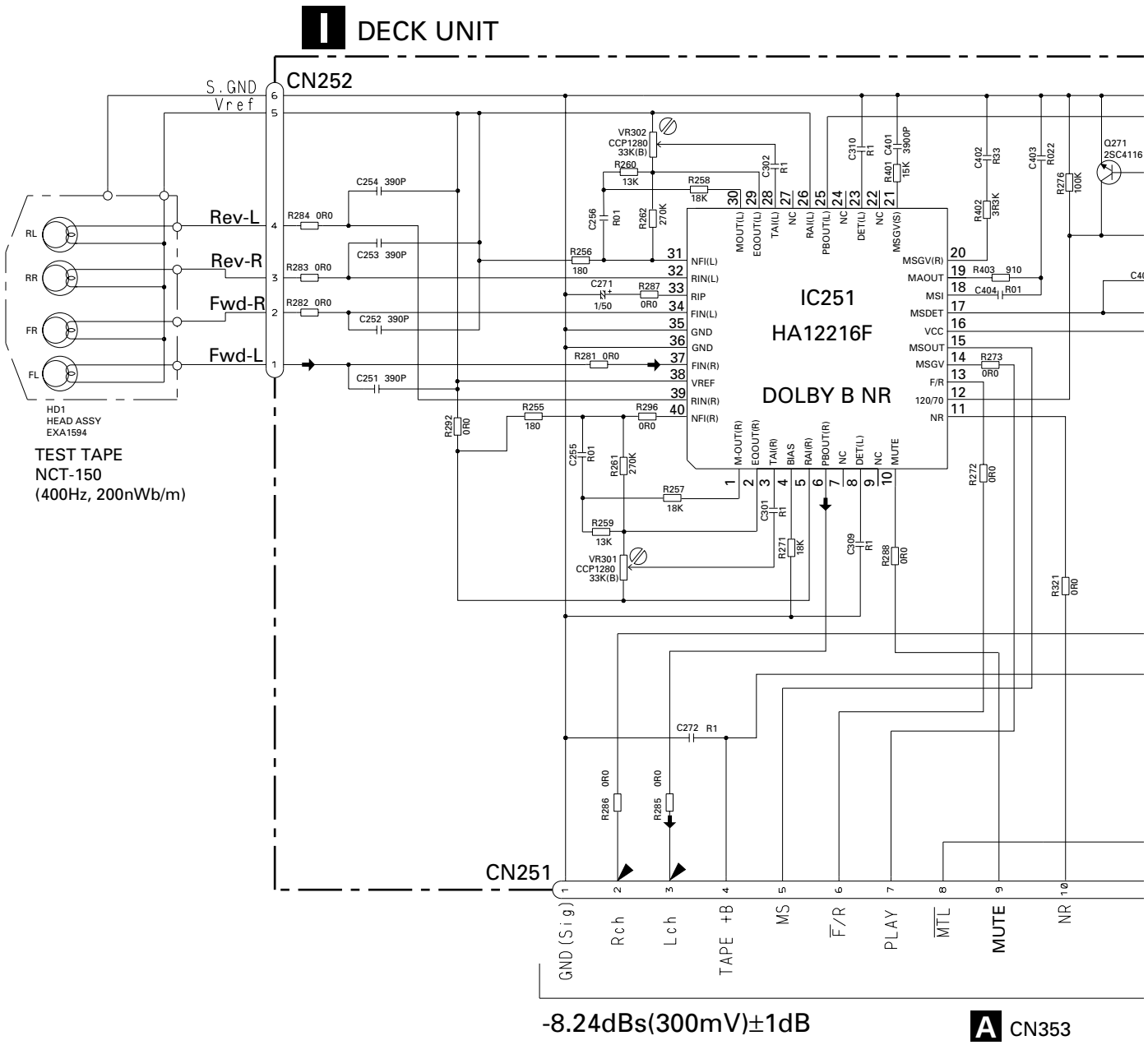

flashLAV
www.club-lexus.ru

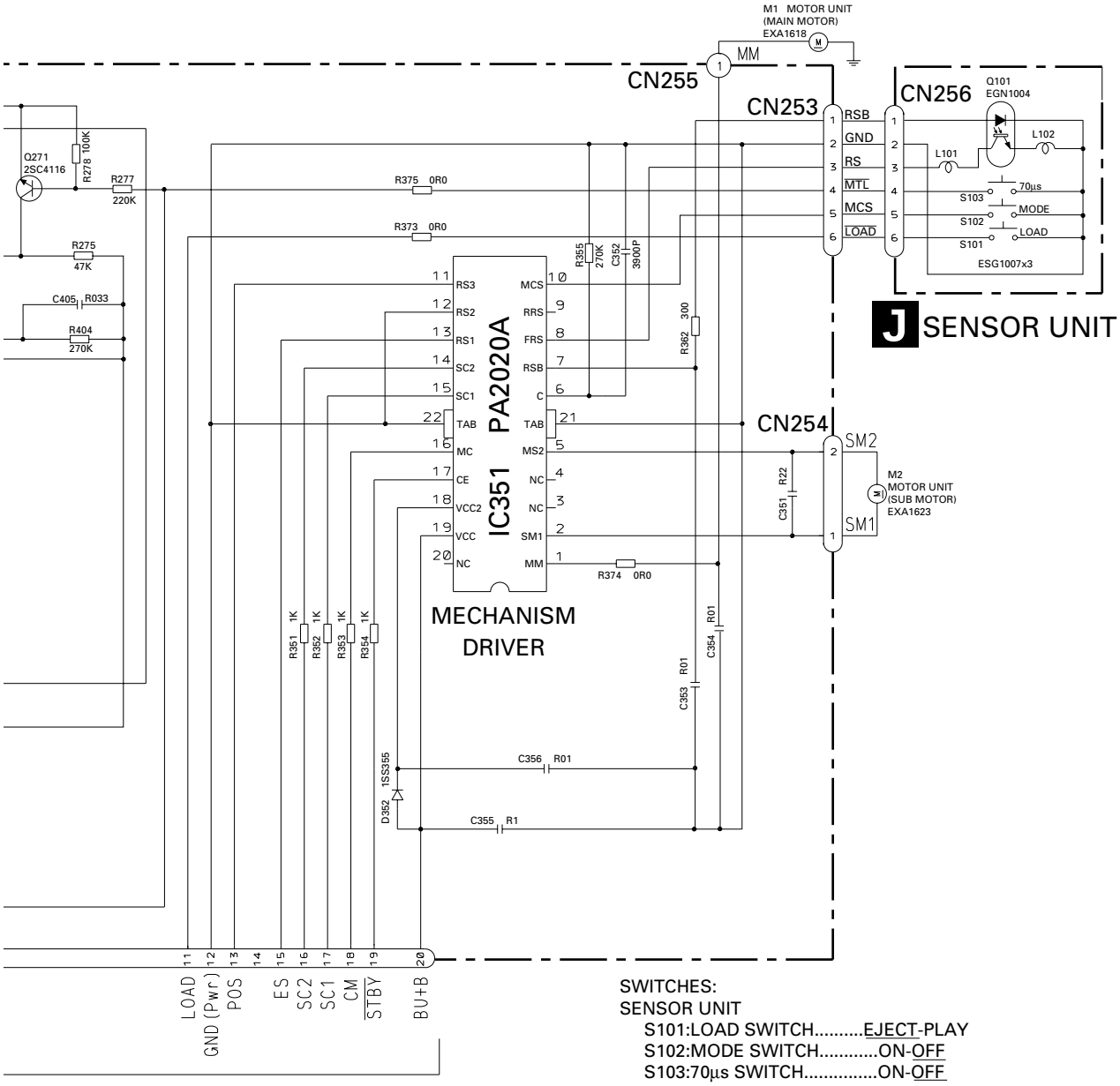

SWITCHES:
SENSOR UNIT
S101:LOAD SWITCH.....EJECT-PLAY
S102:MODE SWITCH.....ON-OFF
S103:70µs SWITCH.....ON-OFF
The underlined indicates the switch position.

flashLAV
www.club-lexus.ru

4. PCB CONNECTION DIAGRAM

4.1 MAIN UNIT

NOTE FOR PCB DIAGRAMS

1. The parts mounted on this PCB include all necessary parts for several destination.
   For further information for respective destinations, be sure to check with the schematic diagram.
2. Viewpoint of PCB diagrams

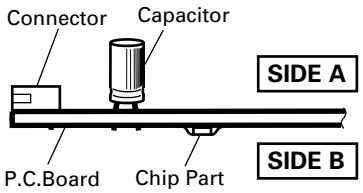

A MAIN UNIT

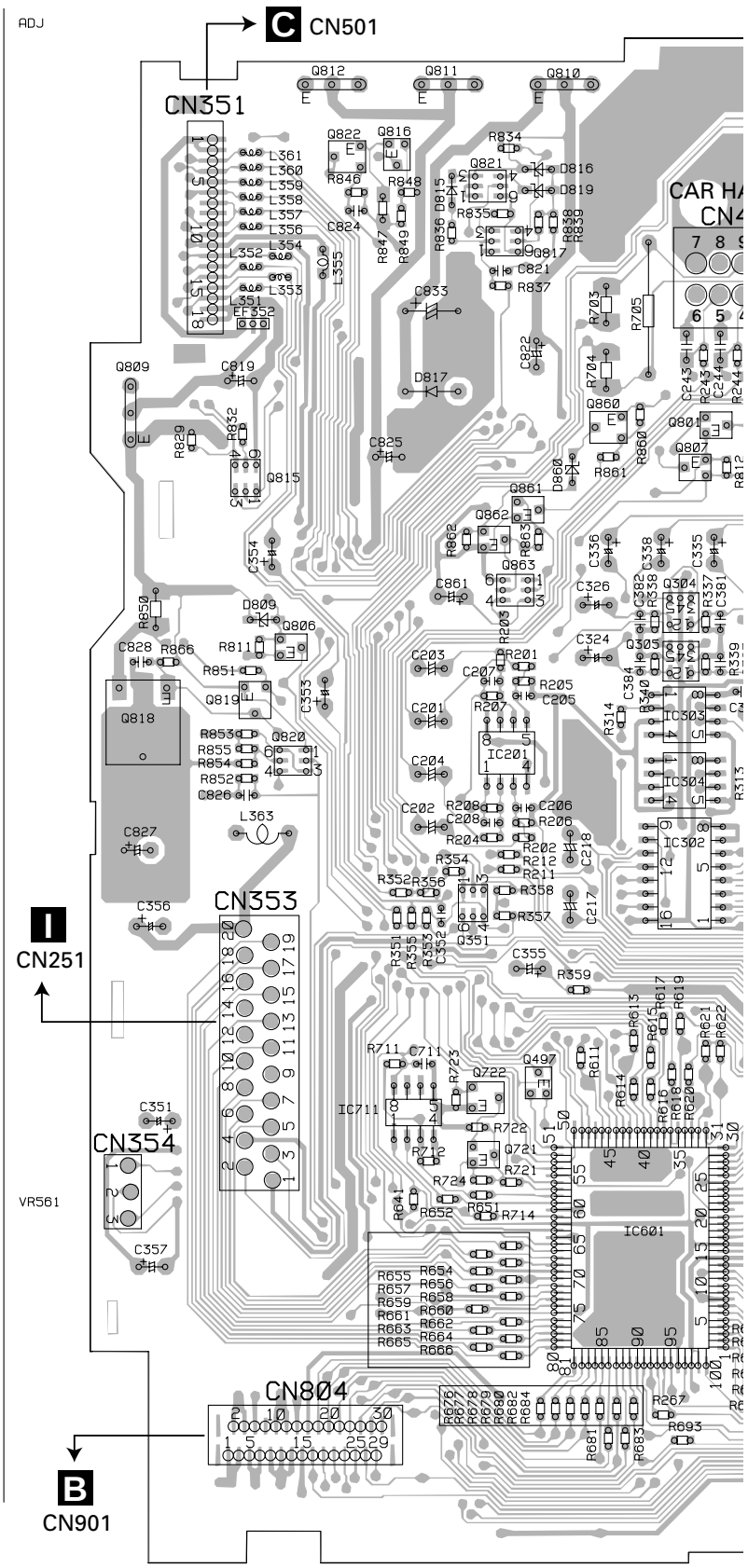

IC, Q

Q811 Q810 Q812
Q822 Q816 Q821
Q817
Q809
Q860 Q801
Q807
Q815 Q861
Q862
Q863 Q825 Q304
Q806 Q204
Q305 Q808 Q870
Q802 IC870
Q819 Q205
Q818 IC303
Q820
IC201 IC203
IC304
Q805 Q563 Q501
IC501 IC204
IC302
IC202 Q564
Q351 Q562
IC562
IC701
Q497
Q722
Q404 IC401 IC711
Q721
Q561
Q644 Q252 Q406
Q645 Q403
IC601 Q405
IC602
Q402
IC561
Q401 IC252
IC604
Q606

ADJ

A

flashLAV
www.club-lexus.ru

SIDE A

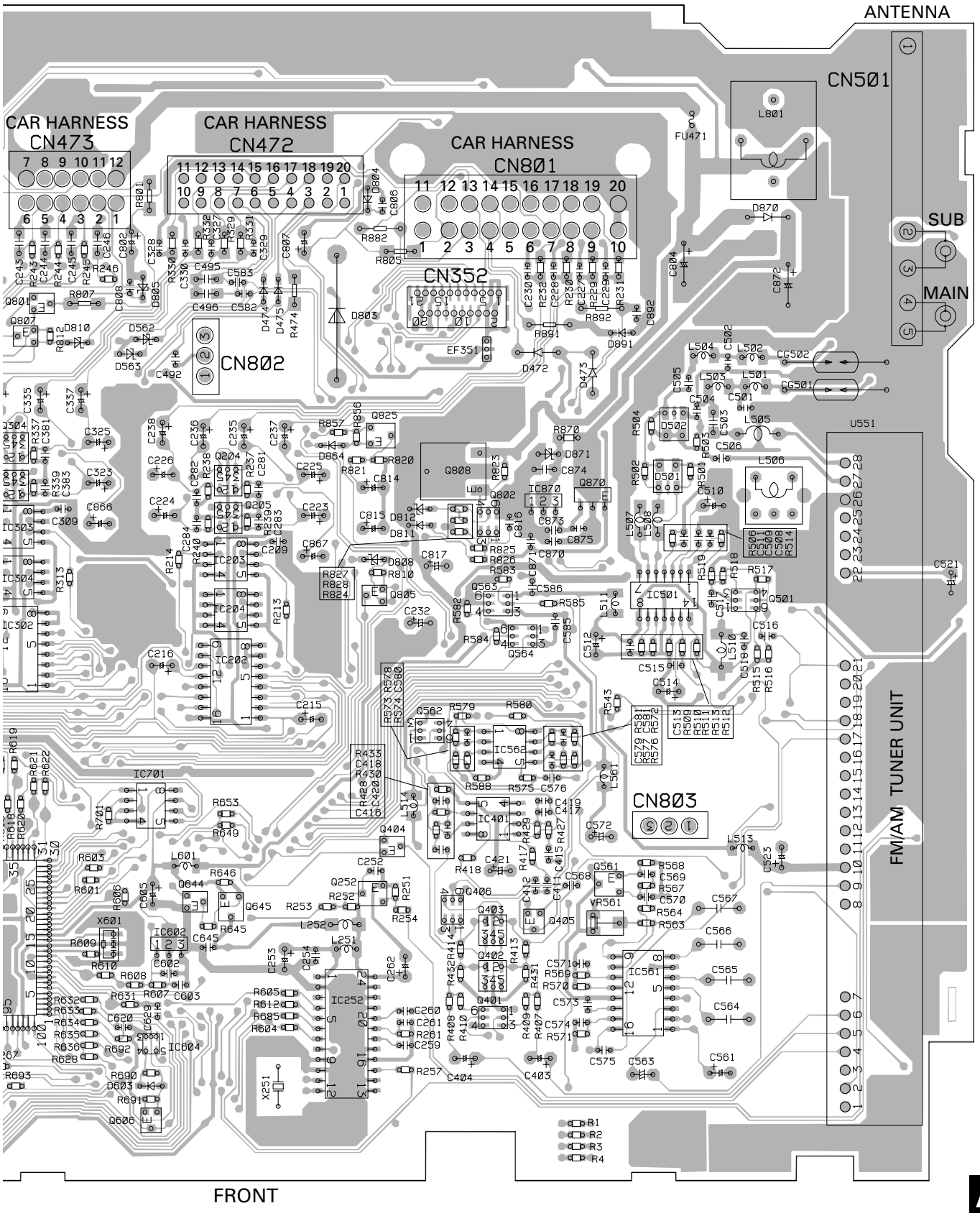

A

flashLAV
www.club-lexus.ru

A MAIN UNIT

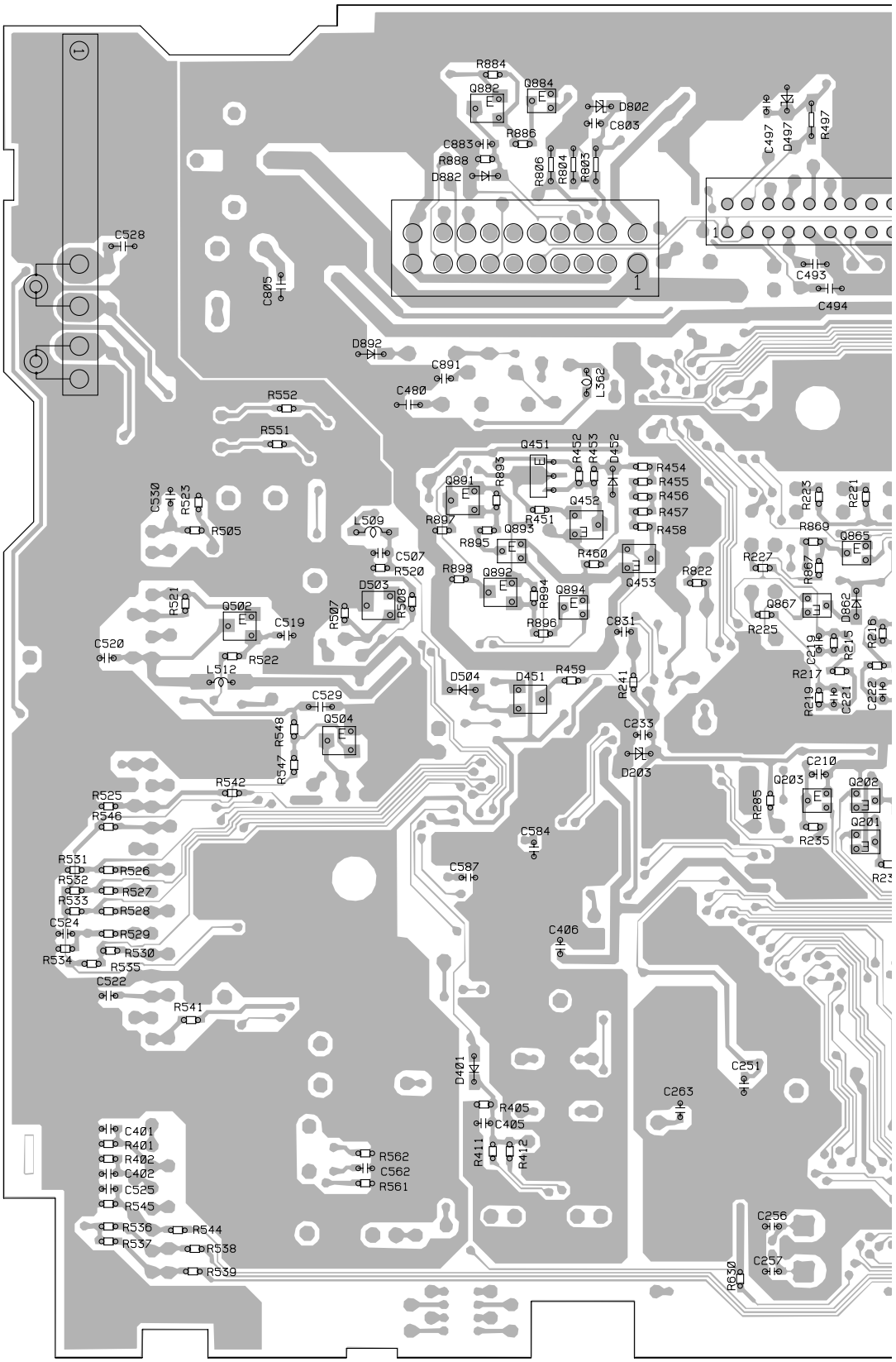

A

flashLAV
www.club-lexus.ru

SIDE B

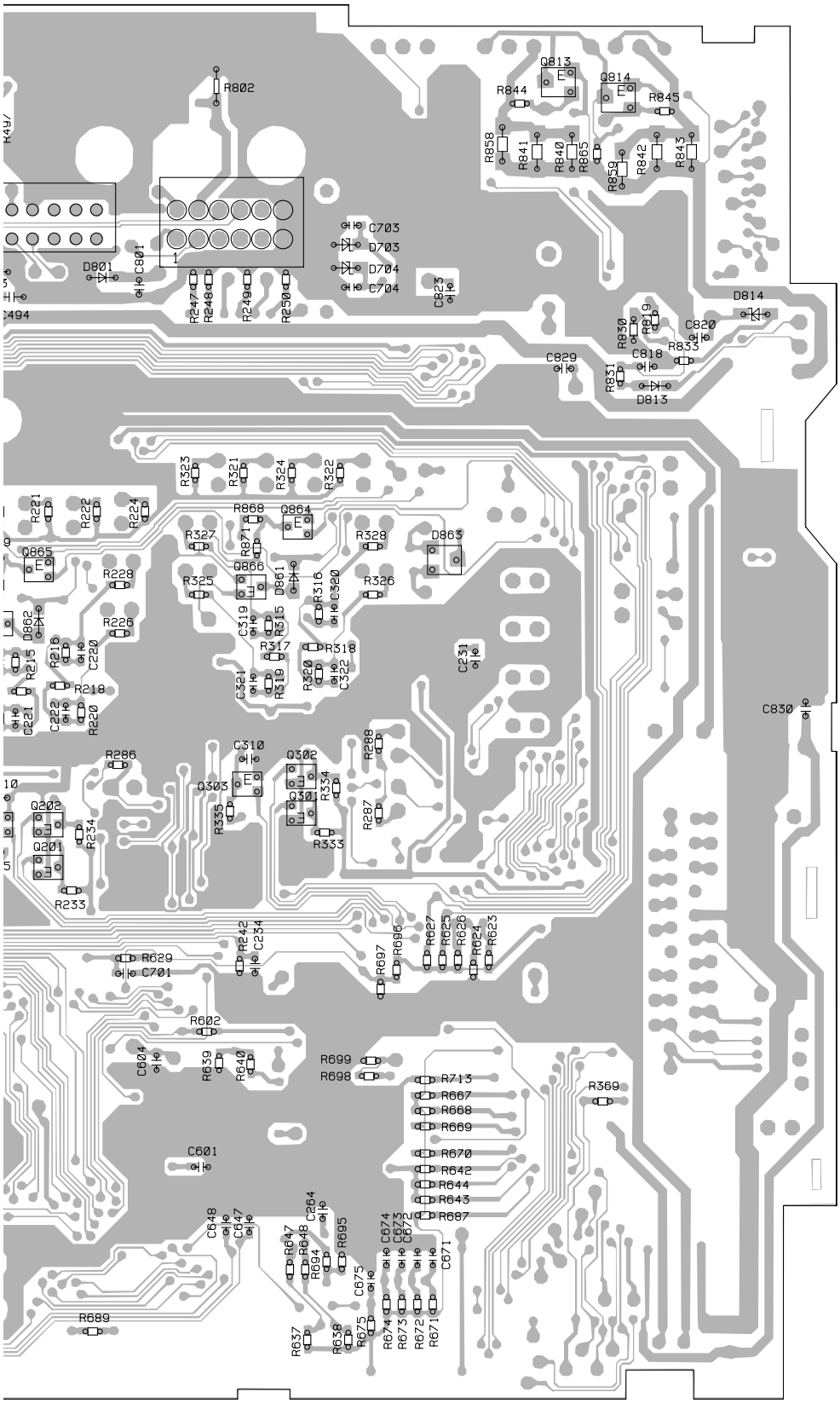

IC, Q

Q813

Q882 Q884
Q814

Q451

Q891
Q452 Q864

Q893 Q865
Q866
Q892 Q453
Q894
Q502 Q867

Q504 Q302

Q303 Q301
Q203 Q202

Q201

A

flashLAV
www.club-lexus.ru

4.2 KEYBOARD PCB

B KEYBOARD PCB

SIDE A

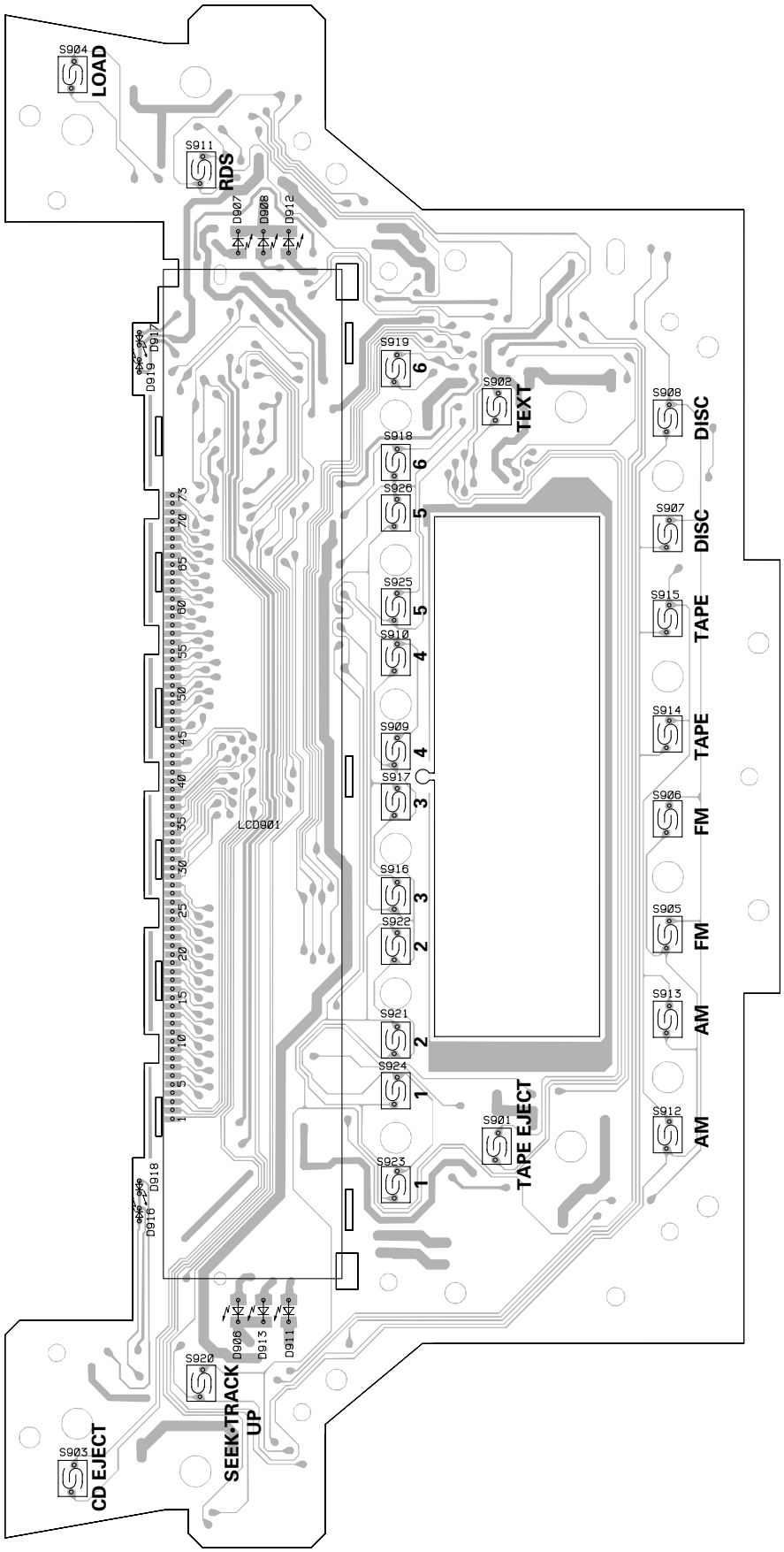

flashLAV
www.club-lexus.ru

B KEYBOARD PCB

SIDE B

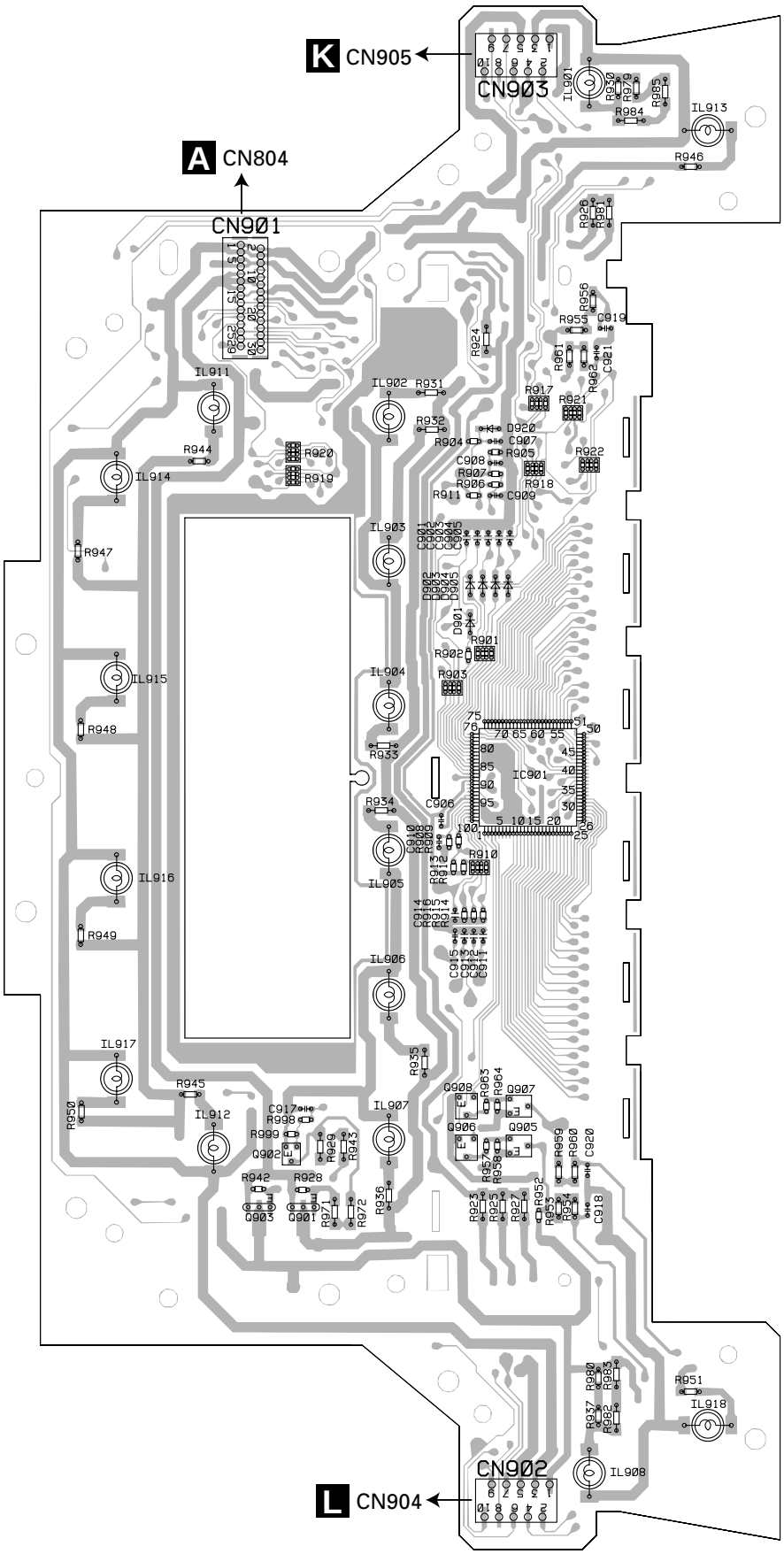

flashLAV
www.club-lexus.ru

4.3 CD MECHANISM MODULE

C CONTROL UNIT (G2T)

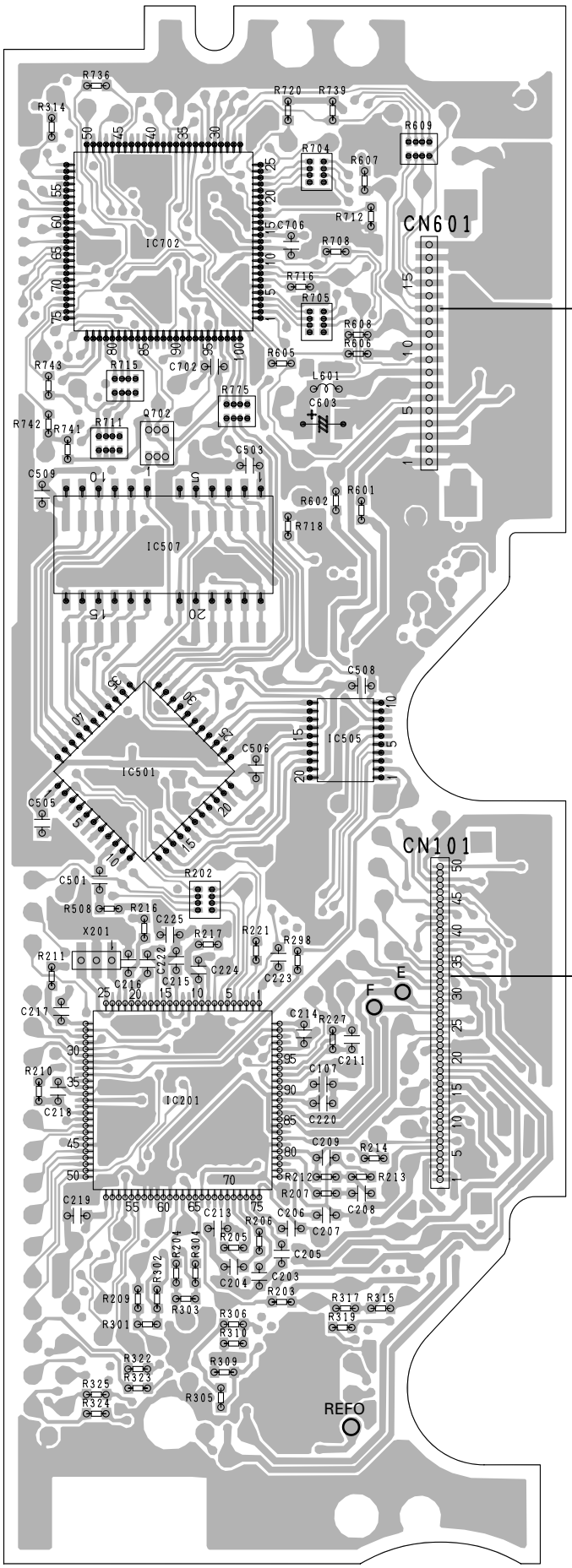

flashLAV
www.club-lexus.ru

C CONTROL UNIT (G2T)

SIDE B

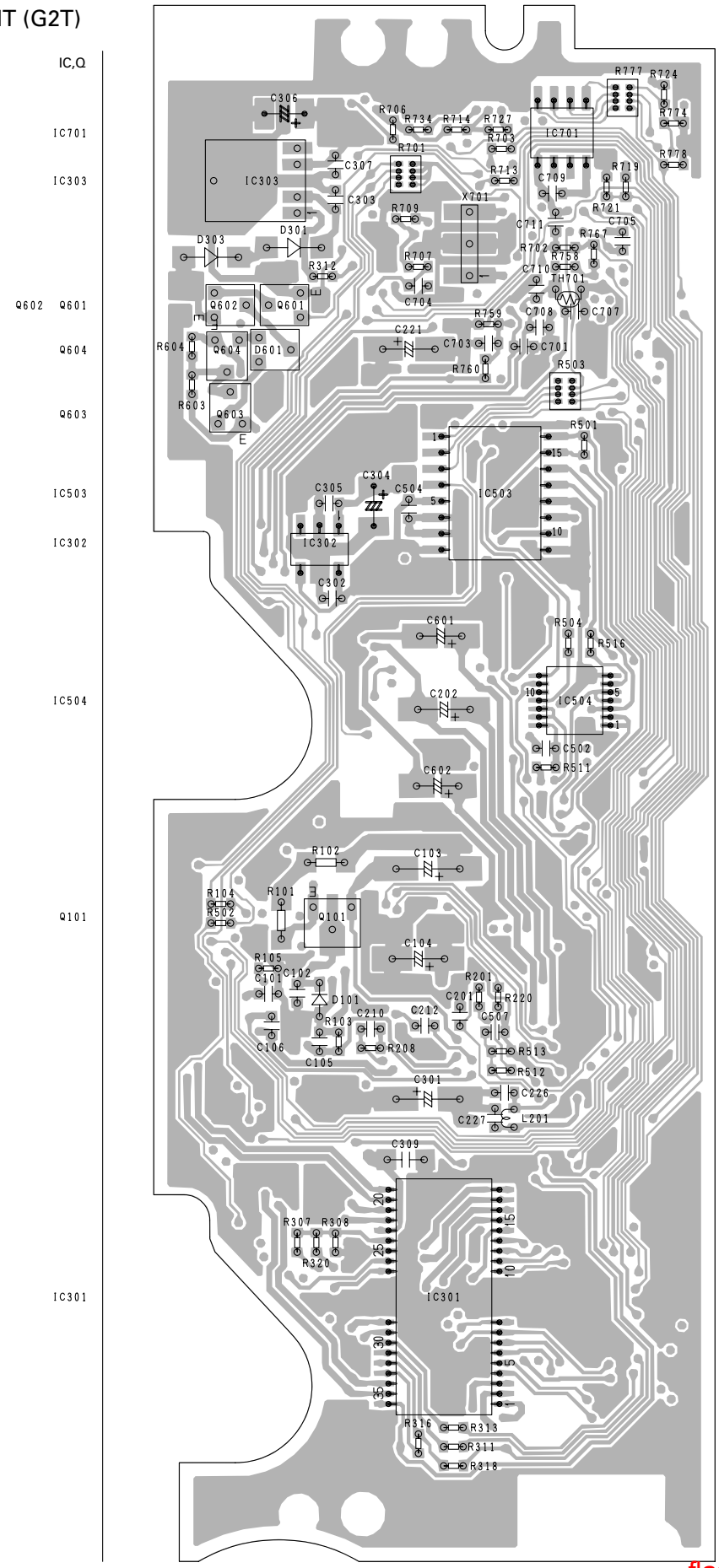

flashLAV
www.club-lexus.ru

D PCB UNIT (LED)

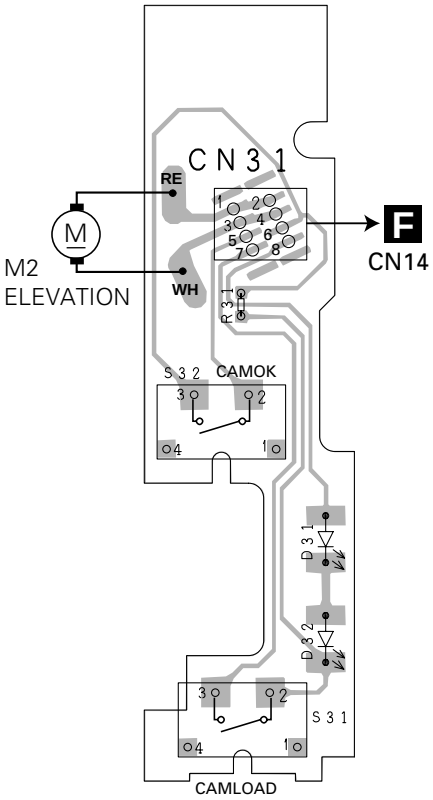

E PCB UNIT (LOAD)

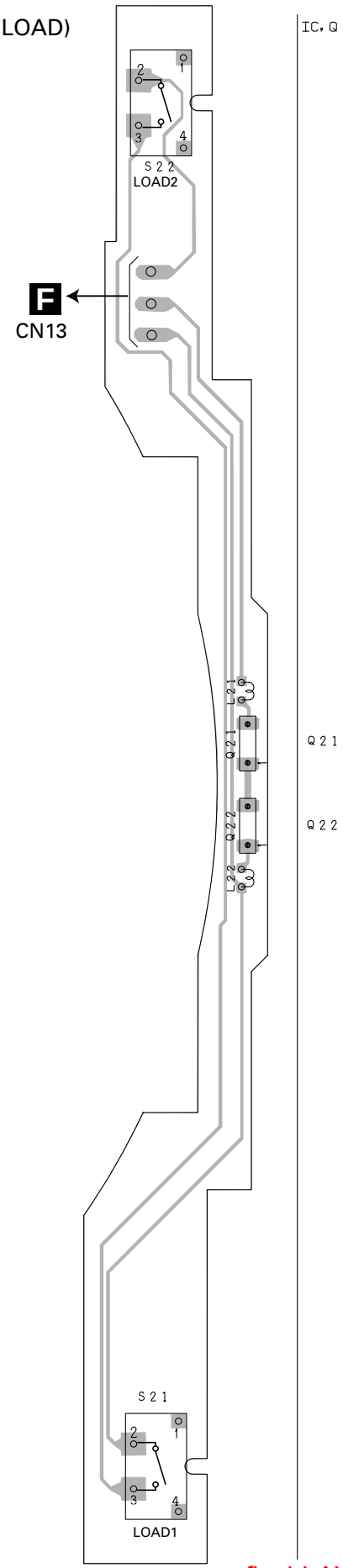

flashLAV
www.club-lexus.ru

F PCB UNIT (SIDE) SIDE A

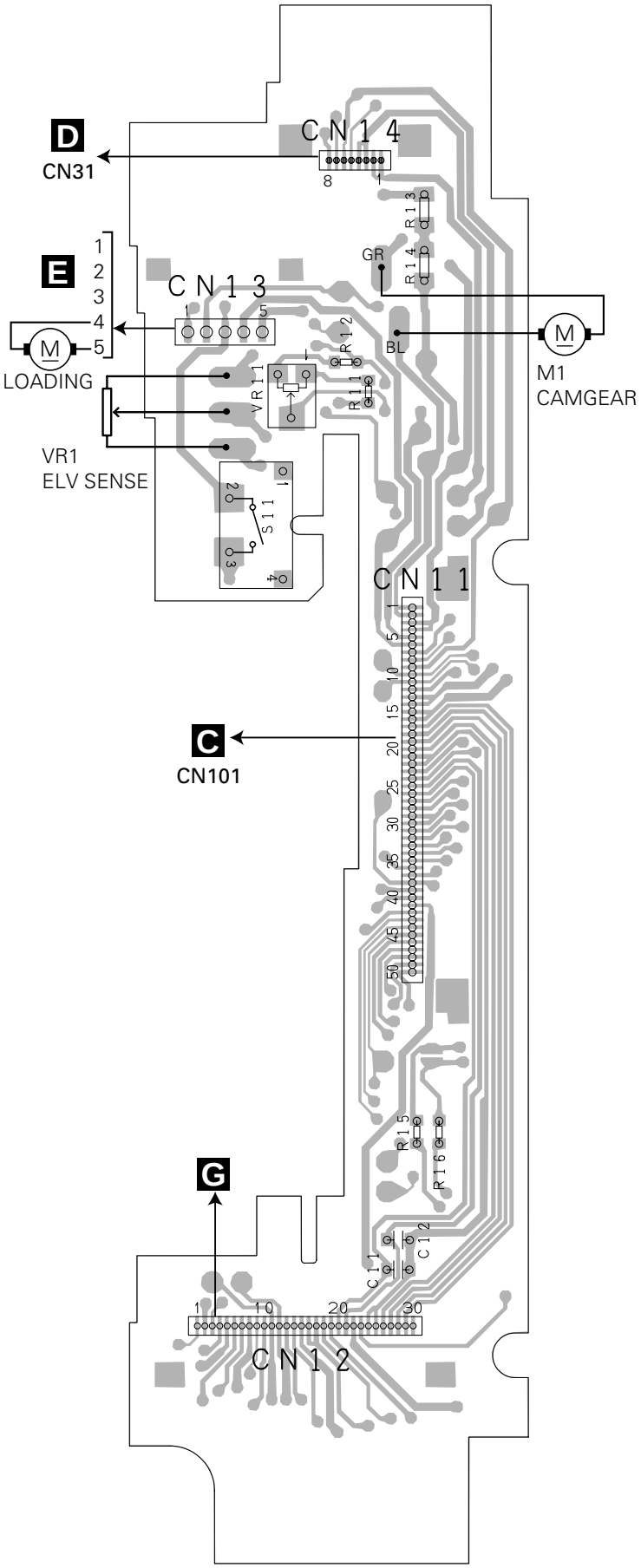

F PCB UNIT (SIDE) SIDE B

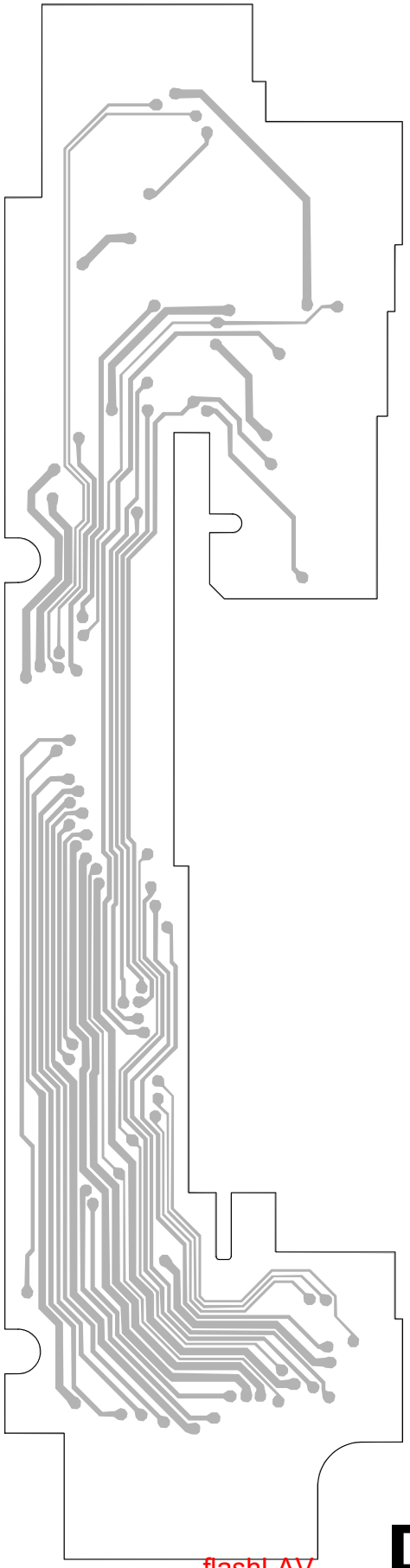

flashLAV
www.club-lexus.ru

G PCB UNIT

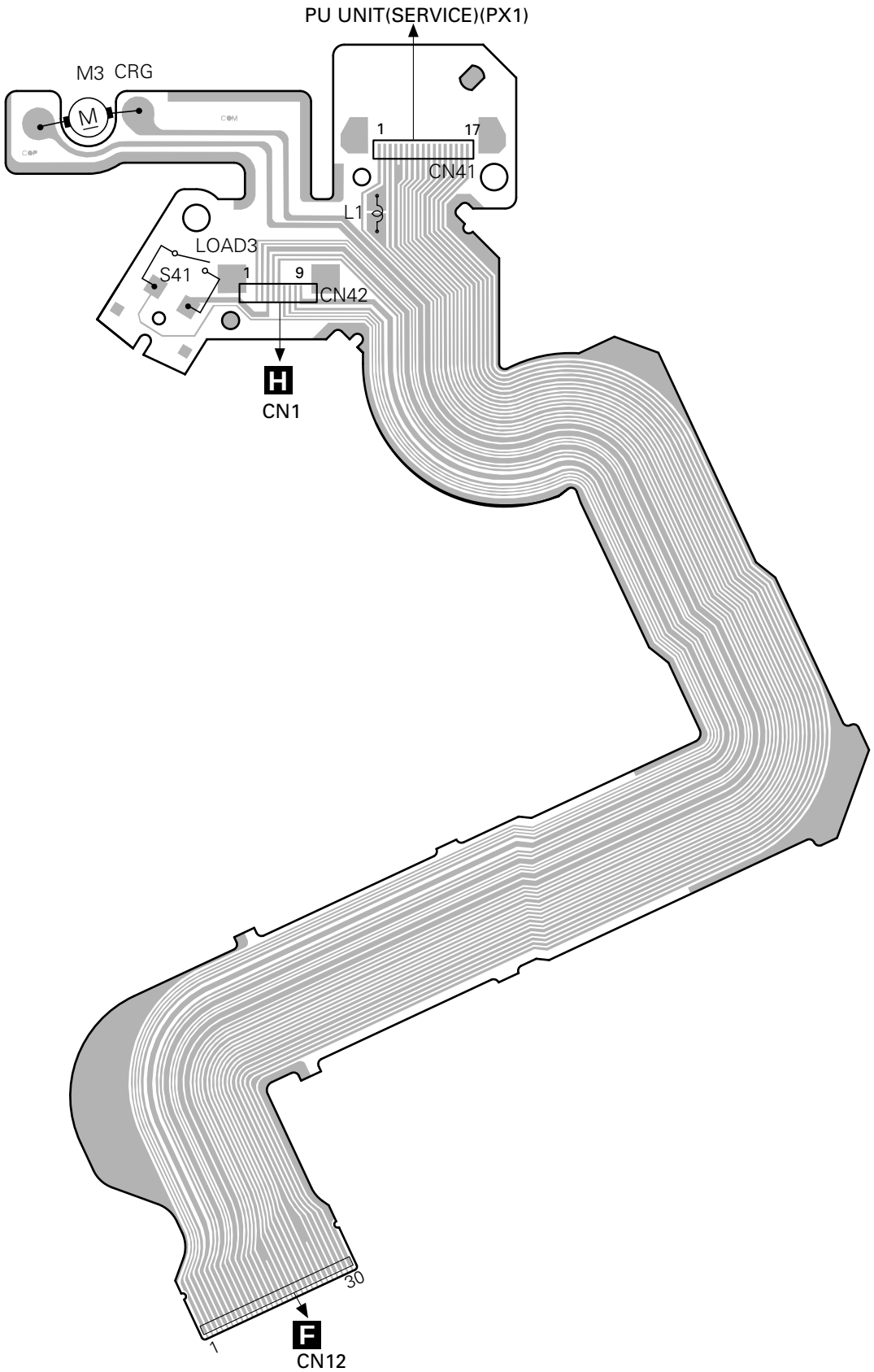

flashLAV
www.club-lexus.ru

H PCB UNIT(M2 UNIT)

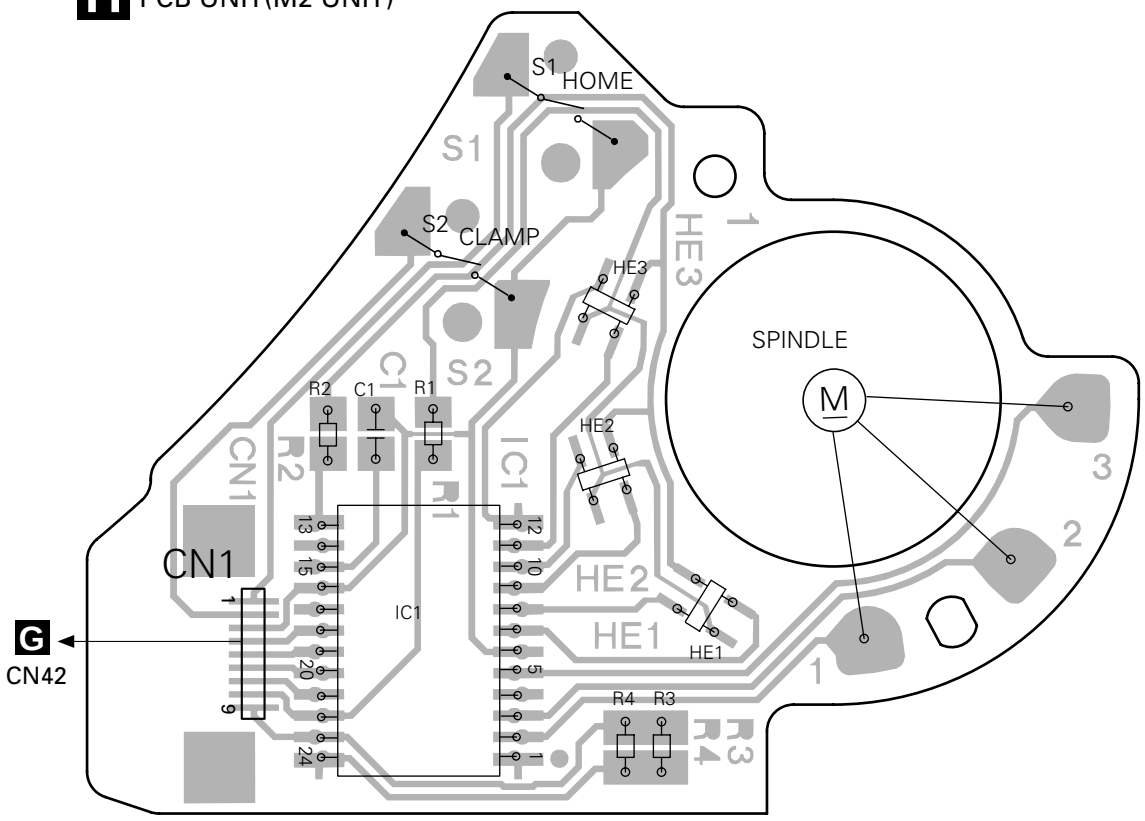

flashLAV
www.club-lexus.ru

4.4 CASSETTE MECHANISM MODULE

DECK UNIT

SIDE A

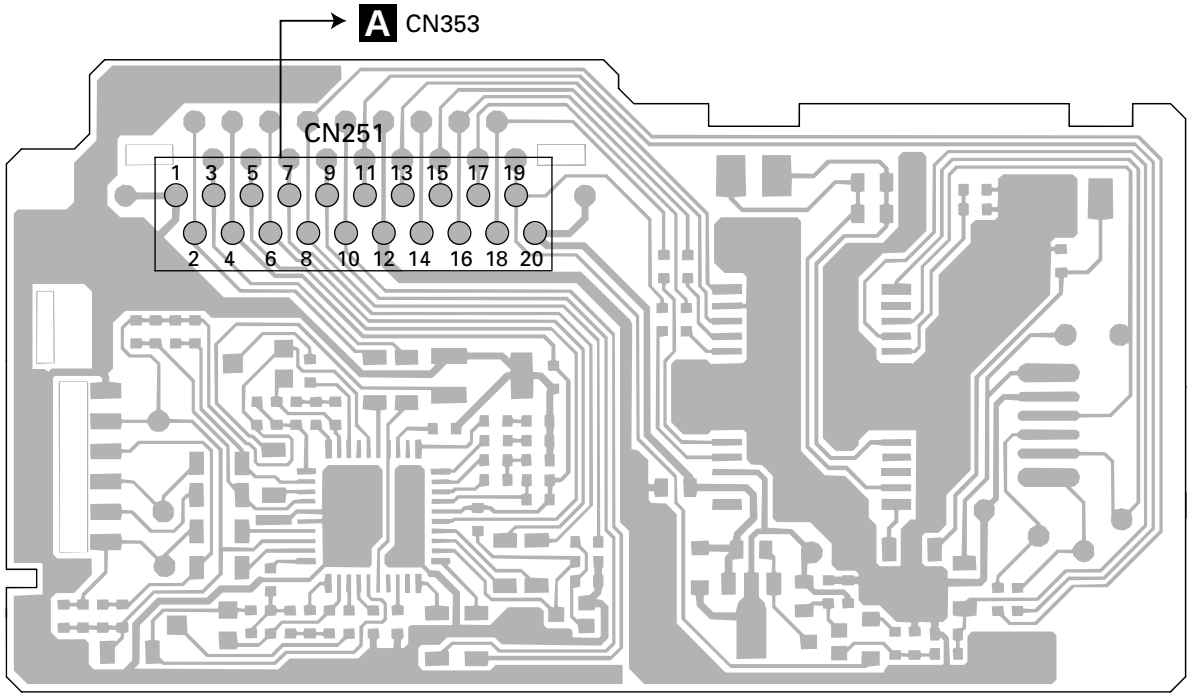

DECK UNIT

SIDE B

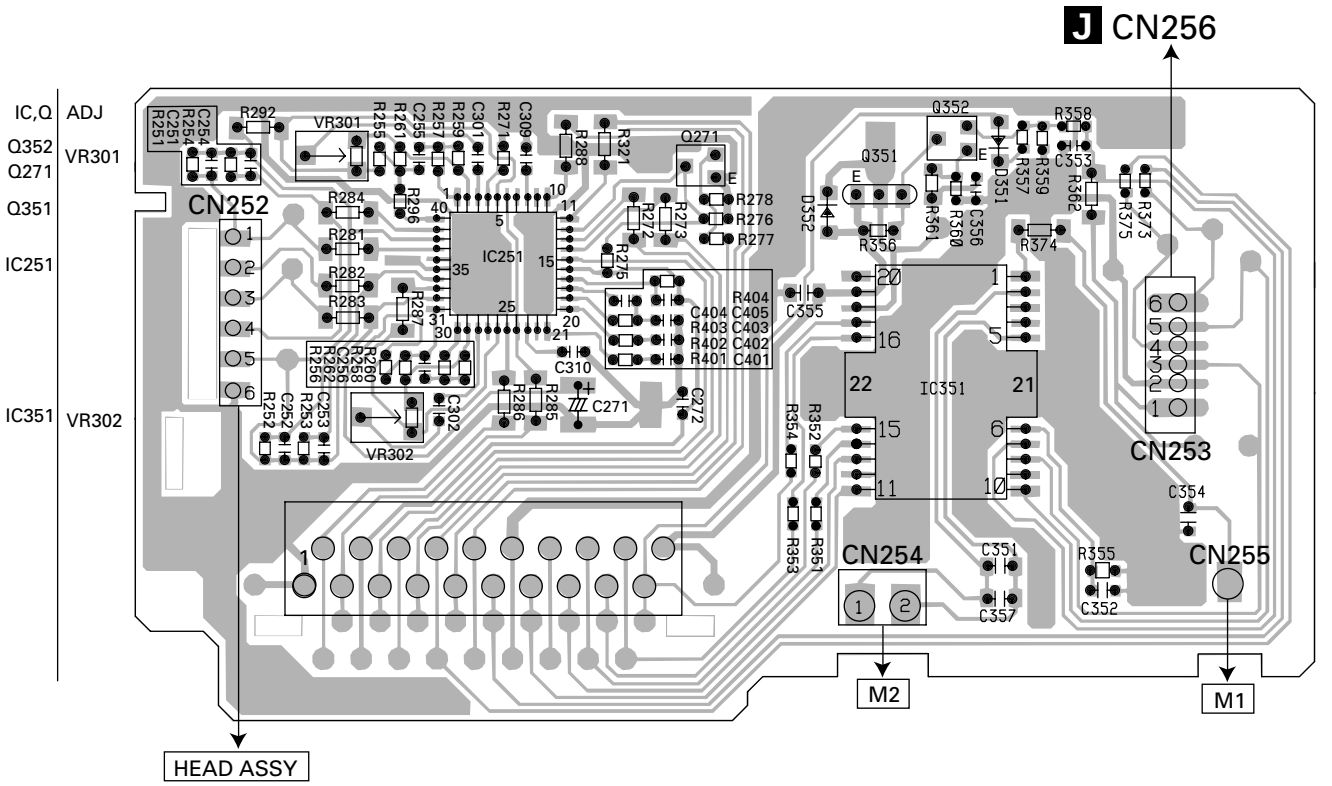

flashLAV
www.club-lexus.ru

J SENSOR UNIT

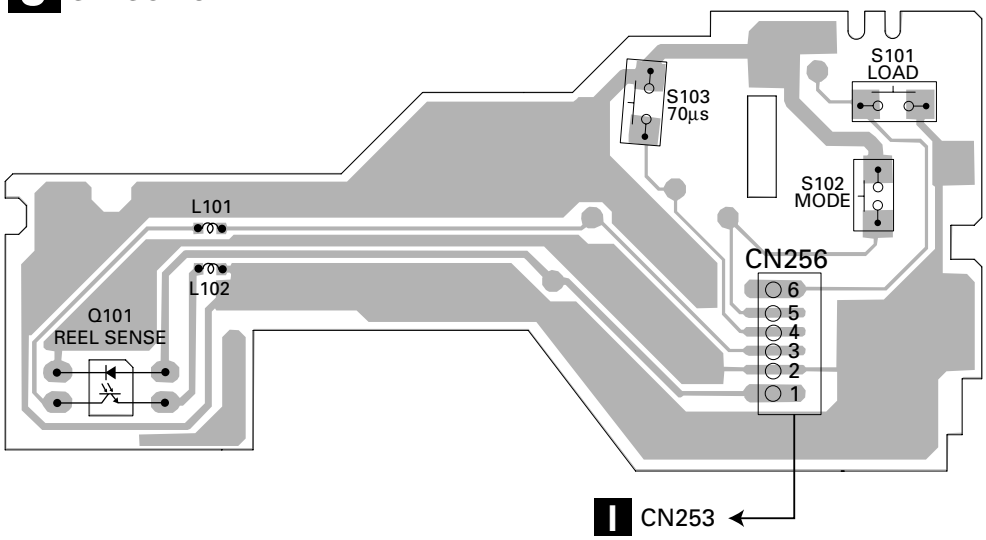

flashLAV
www.club-lexus.ru

4.5 RIGHT PCB, LEFT PCB

K RIGHT PCB — SIDE A

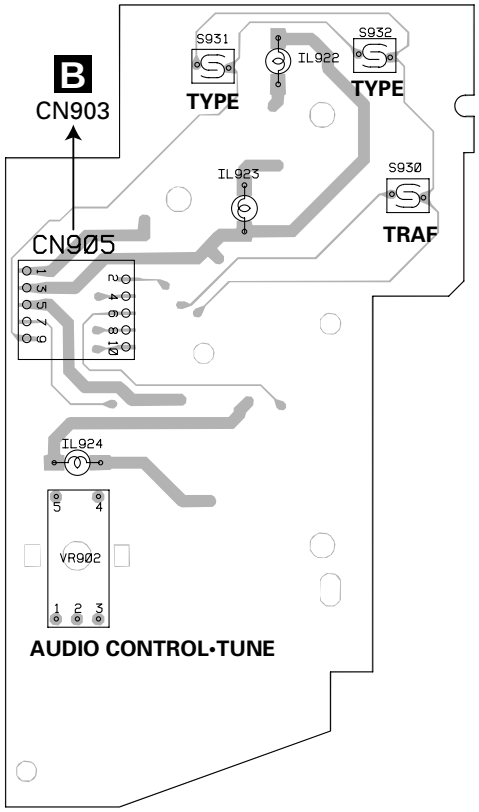

K RIGHT PCB — SIDE B

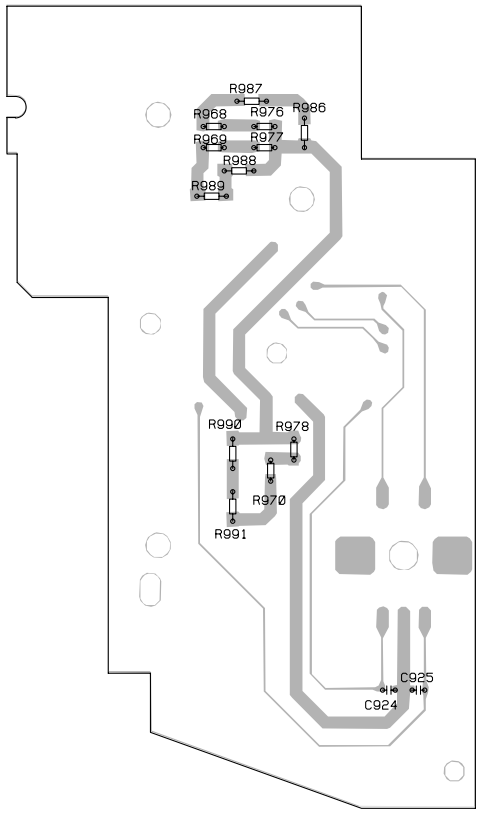

L LEFT PCB — SIDE A

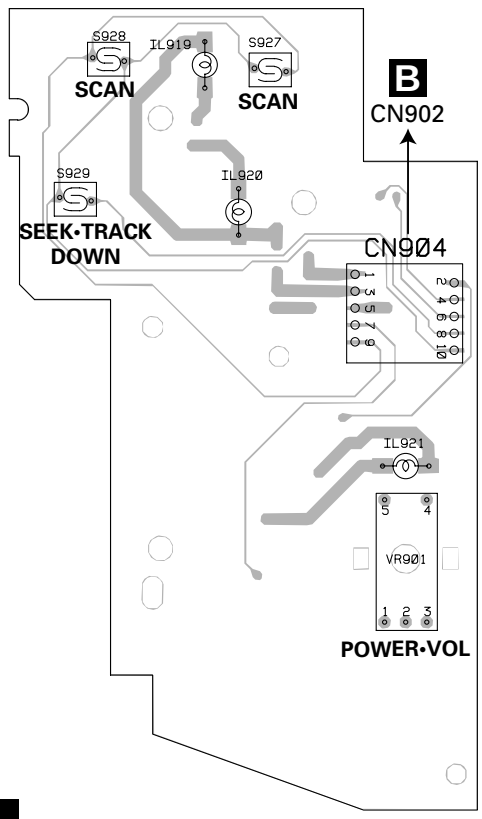

L LEFT PCB — SIDE B

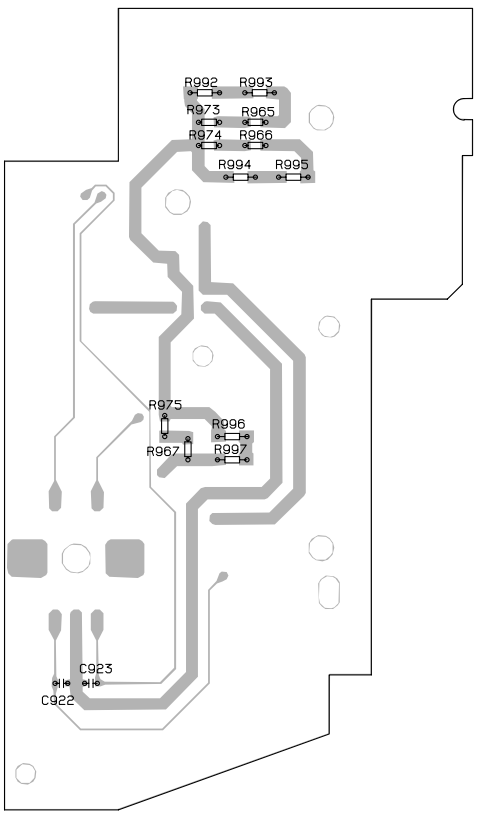

K L

flashLAV
www.club-lexus.ru

5. ELECTRICAL PARTS LIST

NOTES:

- Parts whose parts numbers are omitted are subject to being not supplied.
- The part numbers shown below indicate chip components.

Chip Resistor

RS1/○S○○○J,RS1/○○S○○○J

Chip Capacitor (except for CQS.....)

CKS....., CCS....., CSZS.....

A Unit Number : CWM8385(FX-MG8227ZT/UC)
Unit Number : CWM8553(FX-MG8327ZT/UC)
Unit Name : Main Unit

MISCELLANEOUS

=====Circuit Symbol and No.		===Part Name	Part No.
IC	201	IC	NJM2068MD
IC	202	IC	TC4052BF
IC	203	IC	NJM2068MD
IC	204	IC	NJM2068MD
IC	252	IC	PM4009A
IC	302	IC	TC4052BF
IC	303	IC	NJM2068MD
IC	304	IC	NJM2068MD
IC	401	IC	NJM2068MD
IC	501	IC	LA1061M
IC	561	IC	HA12181FP
IC	601	IC	PD5788A
IC	602	IC	S-80835CNUA-B8U
IC	701	IC	HA12187FP
IC	870	IC	S-812C56AUA-C3K
Q	201	Transistor	DTC144EU
Q	202	Transistor	DTC144EU
Q	203	Transistor	DTC144EU
Q	204	Transistor	FMG13
Q	205	Transistor	FMG13
Q	301	Transistor	DTC144EU
Q	302	Transistor	DTC144EU
Q	303	Transistor	DTC144EU
Q	304	Transistor	FMG13
Q	305	Transistor	FMG13
Q	351	Transistor	IMX1
Q	405	Transistor	DTC143TU
Q	406	Transistor	IMH3A
Q	451	Transistor	2SB1260
Q	452	Transistor	2SC2712
Q	453	Transistor	2SC2712
Q	497	Transistor	DTC114EU
Q	501	Transistor	IMX1
Q	502	Transistor	2SC2712
Q	504	Transistor	2SC2712
Q	561	Transistor	2SC2712
Q	563	Transistor	IMT2A
Q	564	Transistor	IMH1A
Q	644	Transistor	DTC114EU
Q	645	Transistor	2SA1162
Q	721	Transistor	DTA114EU
Q	722	Transistor	2SC2712
Q	801	Transistor	DTC114EU
Q	802	Transistor	IMX1
Q	805	Transistor	DTC144TUA
Q	806	Transistor	DTC144TUA
Q	807	Transistor	DTC144TUA
Q	808	Transistor	2SB1184F5
Q	809	Transistor	2SB1185
Q	811	Transistor	2SB1185
Q	812	Transistor	2SB1185
Q	813	Transistor	2SA1162
Q	814	Transistor	2SA1162
Q	815	Transistor	IMX1
Q	816	Transistor	2SC4081
Q	818	Transistor	2SB1184F5
Q	819	Transistor	2SA1162
Q	820	Transistor	IMX1
Q	822	Transistor	2SD2226K
Q	825	Transistor	2SA1162
Q	860	Transistor	2SA1162
Q	861	Transistor	DTC143EU
Q	862	Transistor	DTC144TUA
Q	863	Transistor	IMD3A
Q	864	Transistor	DTA114EU
Q	865	Transistor	DTA114EU
Q	866	Transistor	DTA114EU
Q	867	Transistor	DTA114EU
Q	870	Transistor	2SD1767
Q	882	Transistor	2SA1162
Q	884	Transistor	DTC124EU
D	203	Diode	HZU4R7(B2)
D	451	Diode	DAN202K
D	452	Diode	1SS355
D	472	Diode	MPG06G-6415G50
D	473	Diode	MPG06G-6415G50
D	474	Diode	1SS355
D	475	Diode	1SS355
D	497	Diode	UDZS20(B)
D	501	Diode	1SV241
D	502	Diode	1SV241
D	503	Diode	DAP202K
D	504	Diode	1SS355
D	703	Diode	UDZS18(B)
D	704	Diode	UDZS18(B)
D	801	Diode	1SS355
D	802	Diode	UDZS5R6(B)
D	803	Diode	RM4LFJ10
D	804	Diode	1SS355
D	805	Diode	UDZS20(B)
D	808	Diode	HZU8R2(B2)
D	809	Diode	HZU7R5(B3)
D	810	Diode	HZU8R2(B2)
D	811	Diode	1SS355
D	812	Diode	HZU7R5(B3)
D	813	Diode	1SS355
D	814	Diode	HZU8R2(B3)
D	860	Diode	HZU8R2(B3)
D	861	Diode	1SS355
D	862	Diode	1SS355
D	863	Diode	DAP202K
D	864	Diode	1SS355
D	870	Diode	MPG06G-6415G50
D	871	Diode	UDZS16(B)
D	882	Diode	1SS355

flashLAV
www.club-lexus.ru

=====Circuit Symbol and No.		===Part Name	Part No.
L	251	Inductor	LCTA101J2520
L	252	Inductor	LCTC100K3216
L	351	Inductor	LCTC2R2K1608
L	352	Inductor	LCTC2R2K1608
L	353	Inductor	LCTC2R2K1608
L	354	Inductor	LCTC2R2K1608
L	355	Inductor	CTF1578
L	356	Inductor	LCTC2R2K1608
L	357	Inductor	CTF1306
L	358	Inductor	CTF1306
L	359	Inductor	CTF1306
L	360	Inductor	CTF1306
L	361	Inductor	CTF1306
L	363	Inductor	LFEA4R7J
L	505	Ferri-Inductor	LAU4R7K
L	506	Coil	CTB1112
L	507	Inductor	LCTC6R8K3216
L	508	Inductor	LCTC6R8K3216
L	509	Inductor	LCTC6R8K3216
L	510	Inductor	LCTA561J4532
L	511	Inductor	LCTA4R7J2520
L	512	Inductor	LCTA1R0J2520
L	513	Inductor	LCTA1R0J2520
L	514	Inductor	LCTA1R0J2520
L	561	Inductor	LCTA4R7J2520
L	601	Inductor	LCTA100J3225
L	801	Coil 350µH	CTH1276
CG	501	Surge Protector	DSP-201M-A21F
CG	502	Surge Protector	DSP-201M-A21F
X	251	Crystal Resonator 3.648MHz	CSS1447
X	601	Radiator 10.0MHz	CSS1577
VR	561	Semi-fixed 10kΩ(B)	CCP1396
FU	471	Fuse 5A	CEK1216
		FM/AM Tuner Unit	CWE1630
EF	352	EMI Filter	CCG1163

RESISTORS

R	2	(FX-MG8327ZT/UC)	RS1/16S0R0J
R	3	(FX-MG8327ZT/UC)	RS1/16S0R0J
R	201		RS1/16S223J
R	202		RS1/16S223J
R	203		RS1/16S223J
R	204		RS1/16S223J
R	205		RS1/16S223J
R	206		RS1/16S223J
R	207		RS1/16S223J
R	208		RS1/16S223J
R	211		RS1/16S101J
R	212		RS1/16S101J
R	213		RS1/16S103J
R	214		RS1/16S103J
R	215		RS1/16S163J
R	216		RS1/16S163J
R	217		RS1/16S163J
R	218		RS1/16S163J
R	219		RS1/16S163J
R	220		RS1/16S163J
R	221		RS1/16S103J
R	222		RS1/16S103J
R	223		RS1/16S103J
R	224		RS1/16S103J
R	225		RS1/16S181J
R	226		RS1/16S181J
R	227		RS1/16S181J
R	228		RS1/16S181J
R	229		RS1/10S470J
R	230		RS1/10S470J
R	231		RS1/10S470J
R	232		RS1/10S470J
R	233		RS1/16S473J
R	234		RS1/16S473J
R	235		RS1/16S473J

=====Circuit Symbol and No.		===Part Name	Part No.
R	237		RS1/16S473J
R	238		RS1/16S473J
R	239		RS1/16S473J
R	240		RS1/16S473J
R	241		RS1/16S222J
R	243		RS1/16S103J
R	244		RS1/16S103J
R	245		RS1/16S103J
R	246		RS1/16S103J
R	247		RS1/16S562J
R	248		RS1/16S562J
R	249		RS1/16S562J
R	250		RS1/16S562J
R	257		RS1/16S102J
R	261		RS1/16S225J
R	285		RS1/16S104J
R	286		RS1/16S104J
R	287		RS1/16S104J
R	288		RS1/16S104J
R	313		RS1/16S103J
R	314		RS1/16S103J
R	315		RS1/16S163J
R	316		RS1/16S163J
R	317		RS1/16S163J
R	318		RS1/16S163J
R	319		RS1/16S163J
R	320		RS1/16S163J
R	321		RS1/16S103J
R	322		RS1/16S103J
R	323		RS1/16S103J
R	324		RS1/16S103J
R	325		RS1/16S181J
R	326		RS1/16S181J
R	327		RS1/16S181J
R	328		RS1/16S181J
R	329		RS1/10S470J
R	330		RS1/10S470J
R	331		RS1/10S470J
R	332		RS1/10S470J
R	333		RS1/16S473J
R	334		RS1/16S473J
R	335		RS1/16S473J
R	337		RS1/16S473J
R	338		RS1/16S473J
R	339		RS1/16S473J
R	340		RS1/16S473J
R	351		RS1/16S103J
R	352		RS1/16S103J
R	353		RS1/16S223J
R	354		RS1/16S223J
R	355		RS1/16S273J
R	356		RS1/16S273J
R	357		RS1/16S102J
R	358		RS1/16S102J
R	359		RS1/16S100J
R	369		RS1/16S100J
R	401		RS1/16S432J
R	402		RS1/16S432J
R	407		RS1/16S102J
R	408		RS1/16S102J
R	413		RS1/16S102J
R	414		RS1/16S102J
R	417	(FX-MG8227ZT/UC)	RS1/16S623J
R	417	(FX-MG8327ZT/UC)	RS1/16S913J
R	418	(FX-MG8227ZT/UC)	RS1/16S623J
R	418	(FX-MG8327ZT/UC)	RS1/16S913J
R	427		RS1/16S203J
R	428		RS1/16S203J
R	429		RS1/16S683J
R	430		RS1/16S683J

flashLAV
www.club-lexus.ru

Circuit Symbol and No.	Part Name	Part No.
R 431		RS1/16S473J
R 432		RS1/16S473J
R 433		RS1/16S101J
R 451		RS1/16S102J
R 452		RS1/16S223J
R 453		RS1/16S823J
R 454		RS1/16S181J
R 455		RS1/16S181J
R 456		RS1/16S181J
R 457		RS1/16S181J
R 458		RS1/16S181J
R 459		RS1/16S223J
R 460		RS1/16S223J
R 474		RS1/8S103J
R 497		RS1/8S221J
R 501		RS1/16S225J
R 502		RS1/16S225J
R 503		RS1/16S225J
R 504		RS1/16S225J
R 505		RS1/16S222J
R 506		RS1/16S104J
R 507		RS1/16S103J
R 508		RS1/16S103J
R 509		RS1/16S334J
R 510		RS1/16S101J
R 511		RS1/16S101J
R 512		RS1/16S104J
R 513		RS1/16S104J
R 514		RS1/16S103J
R 515		RS1/16S182J
R 516		RS1/16S683J
R 517		RS1/16S224J
R 518		RS1/16S473J
R 519		RS1/16S473J
R 520		RS1/16S102J
R 522		RS1/16S222J
R 525		RS1/16S473J
R 526		RS1/16S681J
R 527		RS1/16S681J
R 528		RS1/16S681J
R 529		RS1/16S103J
R 530		RS1/16S681J
R 531		RS1/16S473J
R 532		RS1/16S473J
R 533		RS1/16S472J
R 534		RS1/16S393J
R 535		RS1/16S473J
R 536		RS1/16S103J
R 537		RS1/16S473J
R 538		RS1/16S681J
R 539		RS1/16S681J
R 543		RS1/16S681J
R 546		RS1/16S103J
R 547		RS1/16S103J
R 548		RS1/16S221J
R 551		RS1/16S0R0J
R 552		RS1/16S0R0J
R 561		RS1/16S104J
R 562		RS1/16S123J
R 563		RS1/16S105J
R 564		RS1/16S682J
R 567		RS1/16S822J
R 568		RS1/16S222J
R 569		RS1/16S184J
R 570		RS1/16S223J
R 571		RS1/16S473J
R 582		RS1/16S332J
R 583		RS1/16S332J
R 584		RS1/16S332J
R 585		RS1/16S332J

Circuit Symbol and No.	Part Name	Part No.
R 601		RS1/16S102J
R 602		RS1/16S473J
R 603		RS1/16S102J
R 605		RS1/16S102J
R 606		RS1/16S0R0J
R 607		RS1/16S104J
R 608		RS1/16S102J
R 609		RS1/16S681J
R 610		RS1/16S0R0J
R 611		RS1/16S0R0J
R 612		RS1/16S102J
R 613		RS1/16S0R0J
R 614		RS1/16S102J
R 615		RS1/16S102J
R 616		RS1/16S102J
R 617		RS1/16S102J
R 618		RS1/16S102J
R 619		RS1/16S0R0J
R 620		RS1/16S0R0J
R 621		RS1/16S681J
R 622		RS1/16S0R0J
R 623		RS1/16S473J
R 624		RS1/16S473J
R 625		RS1/16S473J
R 626		RS1/16S473J
R 627		RS1/16S473J
R 629		RS1/16S472J
R 631		RS1/16S0R0J
R 632		RS1/16S102J
R 633		RS1/16S102J
R 634		RS1/16S102J
R 635		RS1/16S471J
R 637		RS1/16S102J
R 638		RS1/16S102J
R 641		RS1/16S473J
R 642		RS1/16S104J
R 643		RS1/16S104J
R 644		RS1/16S473J
R 645		RS1/16S102J
R 646		RS1/16S103J
R 647		RS1/16S102J
R 648		RS1/16S102J
R 649		RS1/16S222J
R 651		RS1/16S0R0J
R 654		RS1/16S102J
R 655		RS1/16S102J
R 656		RS1/16S102J
R 657		RS1/16S102J
R 658		RS1/16S223J
R 659		RS1/16S102J
R 660		RS1/16S102J
R 661		RS1/16S102J
R 662		RS1/16S102J
R 663		RS1/16S102J
R 664		RS1/16S102J
R 665		RS1/16S102J
R 666		RS1/16S681J
R 667		RS1/16S473J
R 668		RS1/16S473J
R 669		RS1/16S473J
R 670		RS1/16S473J
R 671		RS1/16S473J
R 672		RS1/16S473J
R 673		RS1/16S473J
R 674		RS1/16S473J
R 675		RS1/16S473J
R 676		RS1/16S102J
R 677		RS1/16S102J
R 678		RS1/16S102J
R 679		RS1/16S102J

flashLAV
www.club-lexus.ru

=====Circuit Symbol and No.	===	Part Name	Part No.
R	680		RS1/16S102J
R	681		RS1/16S102J
R	683		RS1/16S102J
R	685		RS1/16S102J
R	687		RS1/16S473J
R	689		RS1/16S473J
R	693		RS1/16S0R0J
R	698		RS1/16S102J
R	699		RS1/16S473J
R	701		RS1/16S473J
R	703		RS1/4S101J
R	704		RS1/4S101J
R	705		RS1PMF680J
R	711		RS1/16S473J
R	721		RS1/16S102J
R	722		RS1/16S473J
R	723		RS1/16S103J
R	801		RS1/8S222J
R	802		RS1/8S472J
R	803		RS1/8S472J
R	804		RS1/8S472J
R	805		RS1/8S472J
R	806		RS1/8S472J
R	807		RS1/8S221J
R	810		RS1/16S104J
R	811		RS1/16S104J
R	812		RS1/16S104J
R	819		RS1/16S102J
R	820		RS1/16S123J
R	821		RS1/16S103J
R	822		RS1/16S103J
R	823		RS1/16S223J
R	824		RS1/16S102J
R	825		RS1/16S331J
R	826		RS1/16S103J
R	827		RS1/16S471J
R	828		RS1/16S221J
R	829		RS1/16S223J
R	830		RS1/10S221J
R	831		RS1/16S331J
R	832		RS1/16S471J
R	833		RS1/16S221J
R	840		RS1/4S1R5J
R	841		RS1/4S1R5J
R	842		RS1/4S1R5J
R	843		RS1/4S1R5J
R	844		RS1/16S471J
R	845		RS1/16S471J
R	846		RS1/16S105J
R	847		RS1/10S361J
R	848		RS1/16S3301D
R	849		RS1/16S4301D
R	850		RS1/4S2R2J
R	851		RS1/16S471J
R	852		RS1/16S105J
R	853		RS1/16S102J
R	854		RS1/16S2701D
R	855		RS1/16S4301D
R	856		RS1/16S103J
R	857		RS1/16S103J
R	858		RS1/4S1R5J
R	859		RS1/4S1R5J
R	860		RS1/16S223J
R	861		RS1/16S103J
R	862		RS1/16S104J
R	863		RS1/16S223J
R	865		RS1/16S103J
R	866		RS1/16S103J
R	867		RS1/16S472J
R	868		RS1/16S102J

=====Circuit Symbol and No.	===	Part Name	Part No.
R	869		RS1/16S102J
R	870		RS1/10S102J
R	871		RS1/16S472J
R	882		RD1/4PU121J
R	884		RS1/16S223J
R	886		RS1/16S472J
R	888		RS1/16S473J

CAPACITORS

C	201		CEALNP4R7M16
C	202		CEALNP4R7M16
C	203		CEALNP4R7M16
C	204		CEALNP4R7M16
C	205		CCSRCH330J50
C	206		CCSRCH330J50
C	207		CCSRCH330J50
C	208		CCSRCH330J50
C	209		CKSRYB102K50
C	210		CKSRYB105K10
C	215		CEALNP4R7M16
C	216		CEALNP4R7M16
C	217		CEALNP4R7M16
C	218		CEALNP4R7M16
C	219		CCSRCH220J50
C	220		CCSRCH220J50
C	221		CCSRCH220J50
C	222		CCSRCH220J50
C	223	4.7µF/35V	CCH1016
C	224	4.7µF/35V	CCH1016
C	225	4.7µF/35V	CCH1016
C	226	4.7µF/35V	CCH1016
C	227		CCSRCH221J50
C	228		CCSRCH221J50
C	229		CCSRCH221J50
C	230		CCSRCH221J50
C	231		CKSRYB473K50
C	232		CEAL101M6R3
C	233		CKSRYB102K50
C	235	4.7µF/35V	CCH1016
C	236	4.7µF/35V	CCH1016
C	237	4.7µF/35V	CCH1016
C	238	4.7µF/35V	CCH1016
C	243		CKSQYB102K50
C	244		CKSQYB102K50
C	245		CKSQYB102K50
C	246		CKSQYB102K50
C	251		CKSRYB104K16
C	253		CEAL220M6R3
C	254		CKSRYB104K16
C	256		CCSRCH270J50
C	257		CCSRCH270J50
C	259		CKSRYB104K16
C	260		CCSRCH471J50
C	261		CCSRCH471J50
C	262		CEAL4R7M35
C	263		CKSRYB473K50
C	281		CKSRYB182K50
C	282		CKSRYB182K50
C	283		CKSRYB182K50
C	284		CKSRYB182K50
C	309		CKSRYB102K50
C	310		CKSRYB105K10
C	319		CCSRCH220J50
C	320		CCSRCH220J50
C	321		CCSRCH220J50
C	322		CCSRCH220J50
C	323	4.7µF/35V	CCH1016
C	324	4.7µF/35V	CCH1016
C	325	4.7µF/35V	CCH1016

flashLAV
www.club-lexus.ru

Circuit Symbol and No.		Part Name	Part No.
C	326	4.7µF/35V	CCH1016
C	327		CCSRCH221J50
C	328		CCSRCH221J50
C	329		CCSRCH221J50
C	330		CCSRCH221J50
C	335	4.7µF/35V	CCH1016
C	336	4.7µF/35V	CCH1016
C	337	4.7µF/35V	CCH1016
C	338	4.7µF/35V	CCH1016
C	351		CEAL4R7M35
C	352		CKSRYB103K50
C	353	4.7µF/35V	CCH1016
C	354	4.7µF/35V	CCH1016
C	355		CEAL101M10
C	356		CEAL100M16
C	357		CEAL220M10
C	381		CKSRYB182K50
C	382		CKSRYB182K50
C	383		CKSRYB182K50
C	384		CKSRYB182K50
C	401		CKSRYB183K50
C	402		CKSRYB183K50
C	403	4.7µF/35V	CCH1016
C	404	4.7µF/35V	CCH1016
C	406		CKSRYB102K50
C	411	(FX-MG8227ZT/UC)	CKSRYB104K16
C	411	(FX-MG8327ZT/UC)	CKSRYB183K50
C	412	(FX-MG8227ZT/UC)	CKSRYB104K16
C	412	(FX-MG8327ZT/UC)	CKSRYB183K50
C	415		CKSRYB105K10
C	416		CKSRYB105K10
C	417		CCSRCH331J50
C	418		CCSRCH331J50
C	421		CEAL470M6R3
C	480		CKSQYB102K50
C	492		CKSRYB473K50
C	493		CCSQCH221J50
C	494		CCSQCH221J50
C	497		CCSRCH221J50
C	503		CKSQYB103K50
C	504		CKSRYB222K50
C	505		CKSRYB222K50
C	506		CKSRYB222K50
C	507		CKSRYB222K50
C	508		CKSRYB103K50
C	509		CKSRYB103K50
C	510		CEAL100M16
C	511		CKSRYB472K50
C	512		CEAL100M16
C	513		CKSRYB473K50
C	514		CEAL2R2M50
C	515		CKSRYB102K50
C	516		CKSRYB103K50
C	517		CKSRYB103K50
C	518		CKSRYB392K50
C	519		CKSRYB103K50
C	520		CKSRYB103K50
C	521		CEAT101M10
C	522		CKSRYB103K50
C	523		CEAL100M16
C	524		CKSRYB472K50
C	528		CKSQYB103K50
C	530		CCSRCH100D50
C	561		CEAL3R3M50
C	562		CKSRYB333K16
C	563		CEALNP1R0M50
C	564		CQMA683J50
C	565		CQMA333J50
C	566		CQMA333J50
C	567		CQMA333J50

Circuit Symbol and No.		Part Name	Part No.
C	568		CKSRYB105K10
C	569		CKSRYB333K16
C	570		CKSRYB103K50
C	571		CKSRYB682K50
C	572		CEAL101M10
C	573		CKSRYB392K50
C	574		CKSRYB334K10
C	575		CKSRYB102K50
C	585		CKSRYB223K50
C	586		CKSRYB223K50
C	601		CKSRYB102K50
C	602		CKSRYB103K50
C	603		CKSRYB103K50
C	604		CKSRYB104K16
C	605		CEAL220M6R3
C	645		CKSRYB103K50
C	648		CKSRYB102K50
C	671		CCSRCH101J50
C	672		CCSRCH101J50
C	673		CCSRCH101J50
C	674		CCSRCH101J50
C	675		CCSRCH101J50
C	701		CKSRYB103K50
C	703		CCSRCH221J50
C	704		CCSRCH221J50
C	801		CKSRYB102K50
C	802		CEAL1R0M50
C	803		CKSRYB102K50
C	804	2200µF/16V	CCH1186
C	805		CKSQYB473K50
C	806		CKSRYB102K50
C	807		CEAL1R0M50
C	808		CKSRYB102K50
C	814		CEAL1R0M50
C	815		CEAL1R0M50
C	816		CKSRYB103K50
C	817	100µF/10V	CCH1402
C	818		CKSRYB103K50
C	819	100µF/10V	CCH1402
C	820		CKSRYB103K50
C	824		CKSRYB472K50
C	825	100µF/10V	CCH1402
C	826		CKSRYB472K50
C	828		CKSRYB102K50
C	829		CKSRYB103K50
C	830		CKSRYB103K50
C	831		CKSRYB103K50
C	861		CEAL101M6R3
C	866		CEAL100M16
C	867		CEAL100M16
C	870		CKSRYB103K50
C	871		CKSRYB103K50
C	872	2200µF/16V	CCH1186
C	873		CKSRYB105K10
C	875		CCSRCH101J50
C	883		CKSRYB103K50

Keyboard Unit
Consists of
Keyboard PCB
Right PCB
Left PCB

BKL Unit Number : CWS1366
Unit Name : Keyboard Unit

MISCELLANEOUS

IC	901	IC	LC75804W
Q	901	Transistor	2SB1132
Q	902	Transistor	2SC4116
Q	903	Transistor	2SB1132
Q	905	Transistor	2SA1162

flashLAV
www.club-lexus.ru

			=====Circuit Symbol and No.===Part Name	Part No.
	Q	906	Transistor	DTC143EK
A	Q	907	Transistor	2SA1162
	Q	908	Transistor	DTC143EK
	D	901	Diode	1SS355
	D	902	Diode	1SS355
	D	903	Diode	1SS355
	D	904	Diode	1SS355
	D	905	Diode	1SS355
	D	906	Chip LED	NSCW310-0371
	D	907	Chip LED	NSCW310-0371
	D	911	Chip LED	NSCW310-0371
	D	912	Chip LED	NSCW310-0371
	D	916	LED	SML-310FC
	D	917	LED	SML-310FC
	D	918	LED	SML-310DT
B	D	919	LED	SML-310DT
	D	920	Diode	HZU4R7(B3)
	IL	901	Lamp 8V 60mA	CEL1732
	IL	902	Lamp 8V 60mA	CEL1731
	IL	903	Lamp 8V 60mA	CEL1731
	IL	904	Lamp 8V 60mA	CEL1731
	IL	905	Lamp 8V 60mA	CEL1731
	IL	906	Lamp 8V 60mA	CEL1731
	IL	907	Lamp 8V 60mA	CEL1731
	IL	908	Lamp 8V 60mA	CEL1732
	IL	911	Lamp 8V 60mA	CEL1730
	IL	912	Lamp 8V 60mA	CEL1730
	IL	913	Lamp 8V 60mA	CEL1732
C	IL	914	Lamp 8V 60mA	CEL1730
	IL	915	Lamp 8V 60mA	CEL1730
	IL	916	Lamp 8V 60mA	CEL1730
	IL	917	Lamp 8V 60mA	CEL1730
	IL	918	Lamp 8V 60mA	CEL1732
	IL	919	Lamp 8V 60mA	CEL1734
	IL	920	Lamp 8V 60mA	CEL1746
	IL	921	Lamp 8V 60mA	CEL1746
	IL	922	Lamp 8V 60mA	CEL1734
	IL	923	Lamp 8V 60mA	CEL1746
	IL	924	Lamp 8V 60mA	CEL1746
	VR	901	Encoder(POWER•VOL)	CSD1088
	VR	902	Encoder(AUDIO CONTROL•TUNE)	CSD1087
D	LCD	901	LCD	CAW1722

RESISTORS

	R	901	RAB4CQ102J
	R	902	RS1/16S102J
	R	903	RAB4CQ102J
	R	905	RS1/16S222J
	R	906	RS1/16S222J
	R	907	RS1/16S222J
	R	908	RS1/16S393J
	R	909	RS1/16S681J
	R	910	RAB4CQ102J
	R	911	RS1/16S471J
E	R	912	RS1/16S103J
	R	914	RS1/16S223J
	R	915	RS1/16S223J
	R	916	RS1/16S223J
	R	918	RAB4CQ0R0J
	R	920	RAB4CQ0R0J
	R	922	RAB4CQ0R0J
	R	923	RS1/8S331J
	R	924	RS1/8S331J
	R	926	RS1/8S331J
	R	927	RS1/8S331J
	R	928	RS1/16S103J
	R	929	RS1/8S151J
	R	931	RS1/8S200J
F	R	932	RS1/8S200J

			=====Circuit Symbol and No.===Part Name	Part No.
	R	933		RS1/8S200J
	R	934		RS1/8S200J
	R	935		RS1/8S200J
	R	936		RS1/8S200J
	R	942		RS1/16S103J
	R	943		RS1/8S151J
	R	944		RS1/10S100J
	R	945		RS1/10S100J
	R	946		RS1/10S180J
	R	947		RS1/10S100J
	R	948		RS1/10S100J
	R	949		RS1/10S100J
	R	950		RS1/10S100J
	R	951		RS1/10S180J
	R	953		RS1/10S151J
	R	954		RS1/10S151J
	R	955		RS1/10S151J
	R	956		RS1/10S151J
	R	957		RS1/16S332J
	R	958		RS1/16S103J
	R	959		RS1/10S151J
	R	960		RS1/10S151J
	R	961		RS1/10S151J
	R	962		RS1/10S151J
	R	963		RS1/16S332J
	R	964		RS1/16S103J
	R	965		RS1/10S100J
	R	967		RS1/10S100J
	R	968		RS1/10S100J
	R	970		RS1/10S120J
	R	971		RS1/8S151J
	R	972		RS1/8S151J
	R	973		RS1/10S100J
	R	975		RS1/10S120J
	R	976		RS1/10S100J
	R	978		RS1/10S100J
	R	982		RS1/8S180J
	R	983		RS1/8S150J
	R	984		RS1/8S180J
	R	985		RS1/8S150J
	R	988		RS1/8S180J
	R	989		RS1/8S150J
	R	994		RS1/8S150J
	R	995		RS1/8S180J
	R	998		RS1/16S472J
	R	999		RS1/16S103J

CAPACITORS

	C	906	CKSRYB474K10
	C	907	CKSRYB104K25
	C	908	CKSRYB104K25
	C	909	CKSRYB104K25
	C	910	CCSRCH102J50
	C	911	CCSRCH101J50
	C	913	CCSRCH101J50
	C	915	CKSRYB103K50
	C	918	CKSRYB104K25
	C	919	CKSRYB104K25
	C	920	CKSRYB104K25
	C	921	CKSRYB104K25
	C	922	CCSRCH101J50
	C	923	CCSRCH101J50
	C	924	CCSRCH101J50
	C	925	CCSRCH101J50

flashLAV
www.club-lexus.ru

C Unit Number : CWX2649
Unit Name : Control Unit(G2T)

MISCELLANEOUS

=====Circuit Symbol and No.	===Part Name	Part No.
IC 201	IC	UPD63711GC
IC 301	IC	BD7962FM
IC 302	IC	S-818A33AUC-BGN
IC 303	IC	BA05SFP
IC 501	IC	SM5903BFP
IC 504	IC	TC74VHCT08AFT
IC 505	IC	TC74VHC541FT
IC 507	IC	MSM51V17400F6TFT
IC 702	IC	PD5748E
Q 101	Transistor	2SB1132
Q 601	Transistor	DTC114EK
Q 602	Transistor	DTA123JK
Q 603	Transistor	DTC314TK
Q 604	Transistor	DTC314TK
Q 702	Transistor	UMD3N
D 101	Diode	1SS355
D 301	Diode	S1G-6904G2P
D 303	Diode	S1G-6904G2P
D 601	Chip Diode	MA151WA
L 201	Inductor	CTF1306
L 601	Inductor	CTF1295
TH 701	Thermistor	CCX1061
X 201	Radiator 16.93MHz	CSS1581
X 701	Radiator 10.00MHz	CSS1428

RESISTORS

=====Circuit Symbol and No.	===Part Name	Part No.
R 101		RS1/8S120J
R 102		RS1/8S100J
R 103		RS1/16S222J
R 104		RS1/16S102J
R 105		RS1/16S0R0J
R 201		RS1/16S104J
R 202		RAB4CQ681J
R 203		RS1/16S0R0J
R 204		RS1/16S0R0J
R 205		RS1/16S103J
R 206		RS1/16S393J
R 207		RS1/16S0R0J
R 209		RS1/16S0R0J
R 210		RS1/16S0R0J
R 211		RS1/16S0R0J
R 212		RS1/16S562J
R 213		RS1/16S153J
R 214		RS1/16S123J
R 216		RS1/16S0R0J
R 217		RS1/16S0R0J
R 220		RS1/16S471J
R 221		RS1/16S681J
R 298		RS1/16S0R0J
R 301		RS1/16S103J
R 302		RS1/16S153J
R 303		RS1/16S103J
R 304		RS1/16S103J
R 305		RS1/16S272J
R 306		RS1/16S272J
R 307		RS1/16S182J
R 308		RS1/16S272J
R 309		RS1/16S682J
R 310		RS1/16S822J
R 311		RS1/16S103J
R 312		RS1/16S681J
R 313		RS1/16S103J
R 314		RS1/16S153J
R 315		RS1/16S153J
R 316		RS1/16S153J
R 317		RS1/16S103J
R 318		RS1/16S103J
R 319		RS1/16S102J
R 320		RS1/16S392J
R 322		RS1/16S103J
R 323		RS1/16S103J
R 324		RS1/16S103J
R 325		RS1/16S103J
R 501		RS1/16S0R0J
R 504		RS1/16S331J
R 508		RS1/16S682J
R 511		RS1/16S0R0J
R 512		RS1/16S333J
R 513		RS1/16S473J
R 516		RS1/16S331J
R 601		RS1/16S102J
R 602		RS1/16S102J
R 603		RS1/16S223J
R 604		RS1/16S223J
R 605		RS1/16S102J
R 606		RS1/16S681J
R 607		RS1/16S681J
R 608		RS1/16S102J
R 609		RAB4CQ681J
R 701		RAB4CQ104J
R 702		RS1/16S222J
R 703		RS1/16S681J
R 704		RAB4CQ222J
R 705		RAB4CQ681J
R 706		RS1/16S473J
R 707		RS1/16S473J
R 708		RS1/16S222J
R 709		RS1/16S222J
R 711		RAB4CQ104J
R 712		RS1/16S473J
R 713		RS1/16S681J
R 714		RS1/16S473J
R 715		RAB4CQ222J
R 716		RS1/16S103J
R 718		RS1/16S473J
R 719		RS1/16S104J
R 720		RS1/16S103J
R 724		RS1/16S104J
R 727		RS1/16S0R0J
R 734		RS1/16S104J
R 736		RS1/16S681J
R 739		RS1/16S473J
R 741		RS1/16S104J
R 742		RS1/16S222J
R 743		RS1/16S681J
R 758		RS1/16S1502D
R 759		RS1/16S103J
R 760		RS1/16S433J
R 767		RS1/16S154J
R 775		RAB4CQ681J

CAPACITORS

=====Circuit Symbol and No.	===Part Name	Part No.
C 101		CKSRYB103K25
C 102		CKSRYB104K25
C 103		CEVL101M10
C 104		CEVL470M6R3
C 105		CKSRYB224K16

flashLAV
www.club-lexus.ru

=====Circuit Symbol and No.	===	Part Name	Part No.
C	106		CKSRYB224K16
C	107		CKSRYB224K16
C	201		CKSRYB104K25
C	202		CEVL220M16
C	203		CKSRYB473K25
C	204		CKSRYB182K50
C	205		CKSRYB104K25
C	206		CKSRYB152K50
C	207		CKSRYB224K16
C	208		CCSRCH180J50
C	209		CCSRCK2R0C50
C	210		CCSRCH181J50
C	211		CCSRCH510J50
C	212		CKSRYB682K50
C	213		CKSRYB104K25
C	214		CKSRYB104K25
C	215		CKSRYB103K25
C	216		CKSRYB104K25
C	217		CKSRYB104K25
C	218		CKSRYB104K25
C	219		CKSRYB104K25
C	220		CKSRYB104K25
C	221		CEVL470M6R3
C	222		CKSRYB104K25
C	223		CKSRYB102K50
C	224		CKSRYB104K25
C	225		CKSRYB103K25
C	226		CCSRCH220J50
C	301		CEVL101M10
C	302		CKSRYB224K16
C	303		CKSRYB224K16
C	304	10µF/10V	CCH1349
C	305		CKSRYB224K16
C	306	10µF/10V	CCH1349
C	307		CKSRYB224K16
C	309		CKSYB475K16
C	501		CKSRYB102K50
C	502		CKSRYB104K25
C	503		CKSRYB104K25
C	505		CKSRYB104K25
C	506		CKSRYB104K25
C	508		CKSRYB104K25
C	509		CKSRYB104K25
C	601		CEVL220M6R3
C	602		CEVL220M6R3
C	701		CKSRYB104K25
C	702		CKSRYB104K25
C	703		CKSRYB103K25
C	704		CKSRYB103K25
C	705		CKSRYB104K25
C	706		CKSRYB104K25
C	707		CKSRYB103K25
C	708		CKSRYB473K25

E Unit Number :
Unit Name : PCB Unit(Load)

Q	21	Photo-transistor	CPT231SCTU
Q	22	Photo-transistor	CPT231SCTU
L	21	Inductor	LCYBR15J1608
L	22	Inductor	LCYBR15J1608
S	21	Spring Switch(LOAD1)	CSN1051
S	22	Spring Switch(LOAD2)	CSN1052

=====Circuit Symbol and No.	===	Part Name	Part No.

D Unit Number : CWX2614
Unit Name : PCB Unit(LED)

D	31	Chip LED	CL205IRXTU
D	32	Chip LED	CL205IRXTU
S	31	Spring Switch(CAMLOAD)	CSN1052
S	32	Spring Switch(CAMEOK)	CSN1052
R	31		RS1/16S0R0J

G Unit Number : CWX2611
Unit Name : PCB Unit

L	1	Inductor	CTF1389
S	41	Spring Switch(LOAD3)	CSN1051

F Unit Number : CWX2613
Unit Name : PCB Unit(Side)

MISCELLANEOUS

S	11	Spring Switch(CAMCLMP)	CSN1052
VR	11	Semi-fixed 1kΩ(B)	CCP1338

RESISTORS

R	11		RS1/16S562J
R	12		RS1/16S562J
R	13		RS1/10S391J
R	14		RS1/10S391J
R	15		RS1/16S0R0J
R	16		RS1/16S0R0J

CAPACITORS

C	12		CKSRYB104K25

H Unit Number :
Unit Name : PCB Unit(M2 Unit)

MISCELLANEOUS

IC	1	IC	BA6849FS
S	1	Switch(HOME)	CSN1057
S	2	Switch(CLAMP)	CSN1057

RESISTORS

R	1		RS1/16S221J
R	2		RS1/16S221J
R	3		RS1/16S4R7J
R	4		RS1/16S1R0J

CAPACITORS

C	1		CKSRYB104K16

I Unit Number : EWM1043
Unit Name : Deck Unit

MISCELLANEOUS

IC	251	IC	HA12216F
IC	351	IC	PA2020A
Q	271	Transistor	2SC4116
D	352	Diode	1SS355
VR	301	Semi-fixed 33kΩ(B)	CCP1280
VR	302	Semi-fixed 33kΩ(B)	CCP1280

flashLAV
www.club-lexus.ru

=====Circuit Symbol and No.	Part Name	Part No.

RESISTORS

R	255		RS1/16S181J
R	256		RS1/16S181J
R	257		RS1/16S183J
R	258		RS1/16S183J
R	259		RS1/16S133J
R	260		RS1/16S133J
R	261		RS1/16S274J
R	262		RS1/16S274J
R	271		RS1/16S183J
R	272		RS1/8S0R0J
R	273		RS1/8S0R0J
R	275		RS1/16S473J
R	276		RS1/16S104J
R	277		RS1/16S224J
R	278		RS1/16S104J
R	281		RS1/8S0R0J
R	282		RS1/8S0R0J
R	283		RS1/8S0R0J
R	284		RS1/8S0R0J
R	285		RS1/8S0R0J
R	286		RS1/8S0R0J
R	287		RS1/8S0R0J
R	288		RS1/8S0R0J
R	292		RS1/8S0R0J
R	296		RS1/16S0R0J
R	321		RS1/8S0R0J
R	351		RS1/16S102J
R	352		RS1/16S102J
R	353		RS1/16S102J
R	354		RS1/16S102J
R	355		RS1/16S274J
R	362		RS1/8S301J
R	373		RS1/16S0R0J
R	374		RS1/8S0R0J
R	375		RS1/16S0R0J
R	401		RS1/16S153J
R	402		RS1/16S332J
R	403		RS1/16S911J
R	404		RS1/16S274J

CAPACITORS

C	251		CKSRYB391K50
C	252		CKSRYB391K50
C	253		CKSRYB391K50
C	254		CKSRYB391K50
C	255		CKSRYB103K50
C	256		CKSRYB103K50
C	271		CEH1R0M50
C	272		CKSRYB104K16
C	301		CKSRYB104K16
C	302		CKSRYB104K16
C	309		CKSRYB104K16
C	310		CKSRYB104K16
C	351		CKSQYB224K25
C	352		CKSRYB392K50
C	353		CKSRYB103K50
C	354		CKSRYB103K50
C	355		CKSQYB104K50
C	356		CKSRYB103K50
C	401		CKSRYB392K50
C	402		CKSRYB334K10
C	403		CKSRYB223K25
C	404		CKSRYB103K50
C	405		CKSRYB333K16

=====Circuit Symbol and No.	Part Name	Part No.

J Unit Number : EWM1041
Unit Name : Sensor Unit

MISCELLANEOUS

L	101	Inductor	CTF1546
L	102	Inductor	CTF1546
S	101	Switch(LOAD)	ESG1007
S	102	Switch(MODE)	ESG1007
S	103	Switch(70μS)	ESG1007
Q	101	Photo-reflector	EGN1004

Miscellaneous Parts List

M	1	Motor Unit(MAIN)	EXA1618
M	2	Motor Unit(SUB)	EXA1623
HD	1	Head Assy	EXA1594
M	1	Motor Unit(-A)(CAMGEAR)	CXC1144
M	2	Motor Unit(-B)(ELEVATION)	CXC1145
M	3	Motor Unit(-A)(CRG)	CXC1143
VR	1	Variable Resistor 10kΩ	CCW1023
		PU Unit(Service)(PX1)	CXX1569

flashLAV
www.club-lexus.ru

6. ADJUSTMENT

6.1 CONNECTION DIAGRAM

● **EMV/RSE/NAVI SYSTEM(AMP:P AND M/L)**

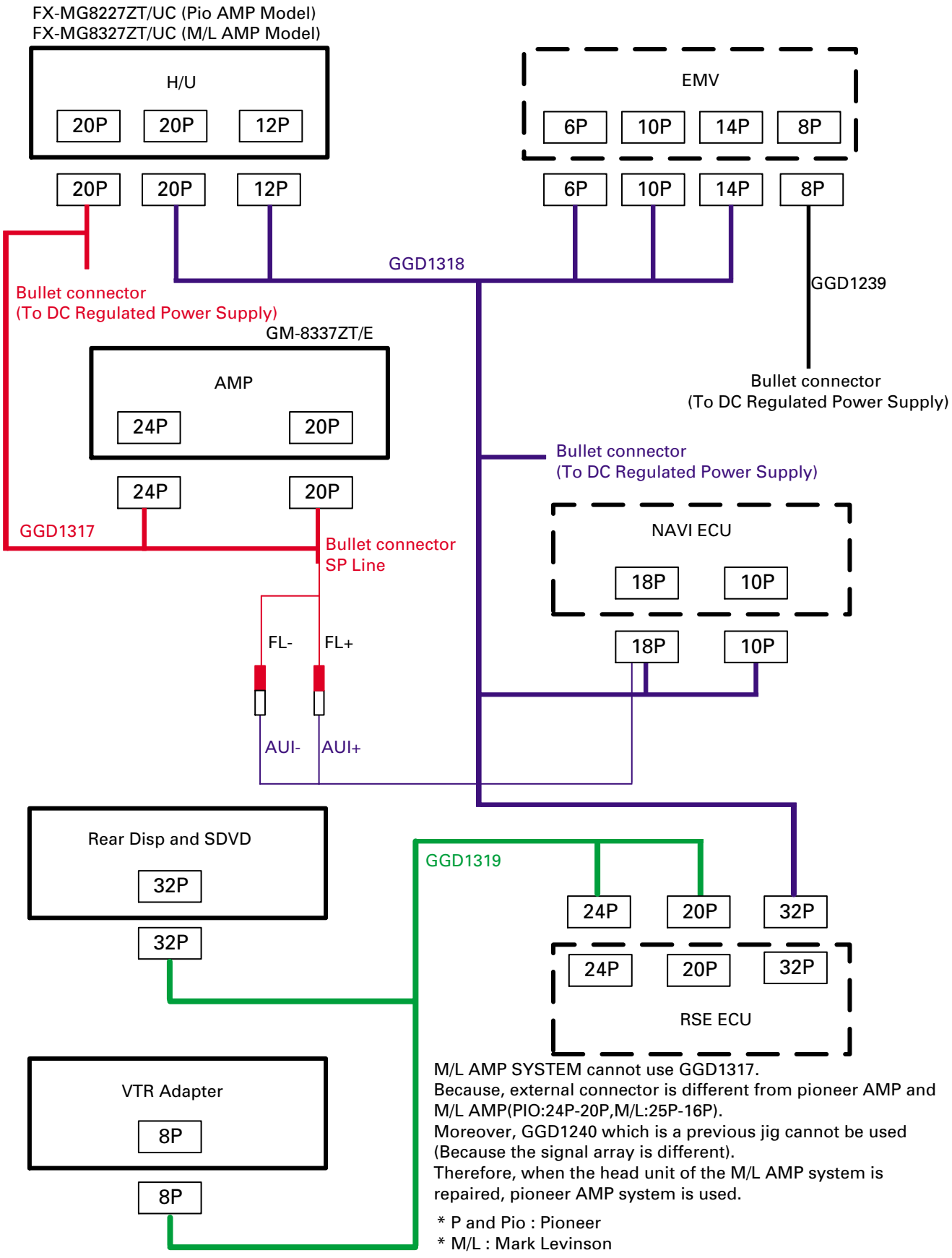

M/L AMP SYSTEM cannot use GGD1317.
Because, external connector is different from pioneer AMP and M/L AMP(PIO:24P-20P,M/L:25P-16P).
Moreover, GGD1240 which is a previous jig cannot be used (Because the signal array is different).
Therefore, when the head unit of the M/L AMP system is repaired, pioneer AMP system is used.

* P and Pio : Pioneer
* M/L : Mark Levinson

flashLAV
www.club-lexus.ru

● NAVI SYSTEM(AMP:P AND M/L)

FX-MG8227ZT/UC (Pio AMP Model)
FX-MG8327ZT/UC (M/L AMP Model)

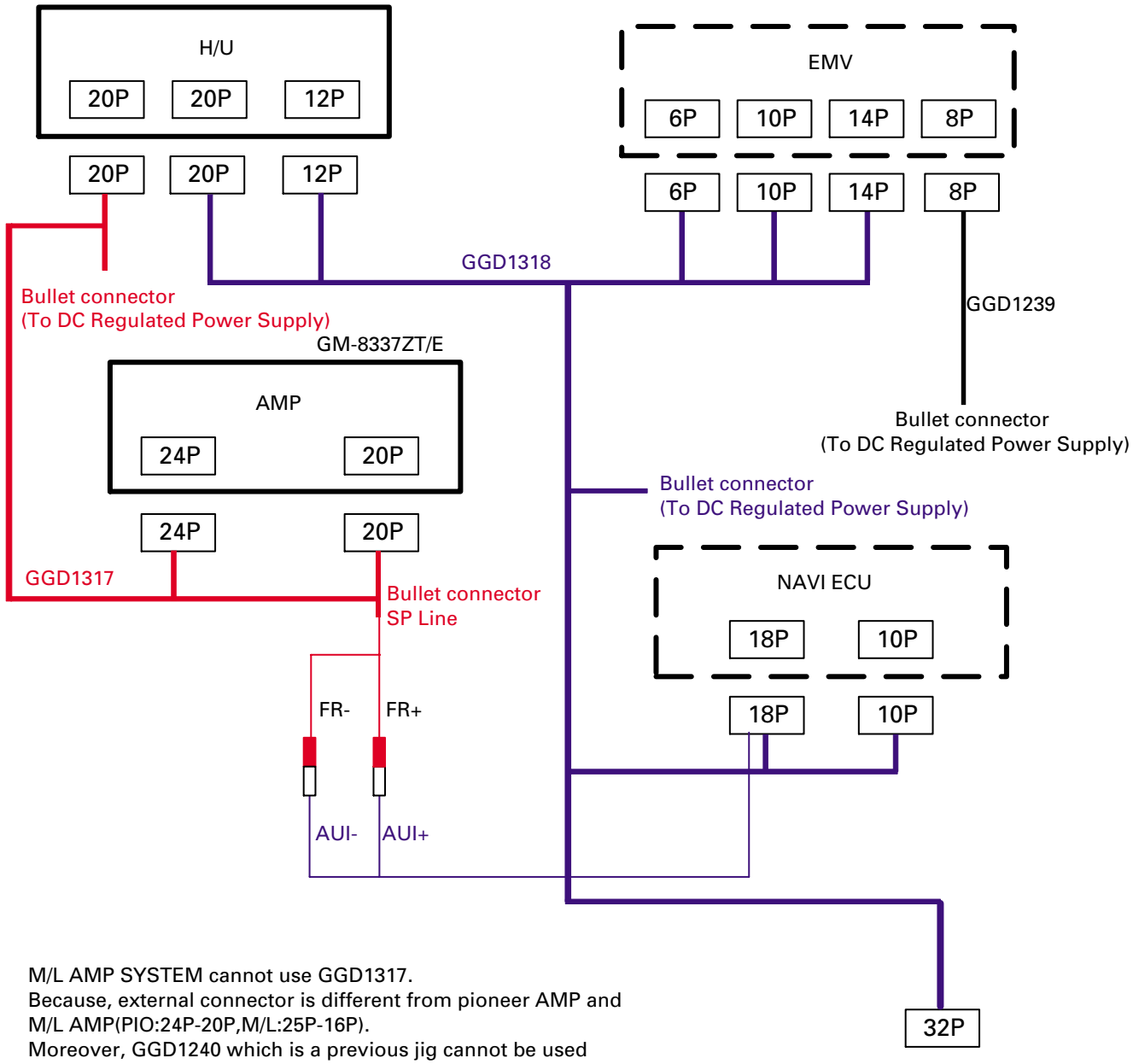

M/L AMP SYSTEM cannot use GGD1317.
Because, external connector is different from pioneer AMP and M/L AMP(PIO:24P-20P,M/L:25P-16P).
Moreover, GGD1240 which is a previous jig cannot be used (Because the signal array is different).
Therefore, when the head unit of the M/L AMP system is repaired, pioneer AMP system is used.

* P and Pio : Pioneer
* M/L : Mark Levinson

flashLAV
www.club-lexus.ru

● RSE SYSTEM(AMP:P AND M/L)

FX-MG8227ZT/UC (Pio AMP Model)
FX-MG8327ZT/UC (M/L AMP Model)

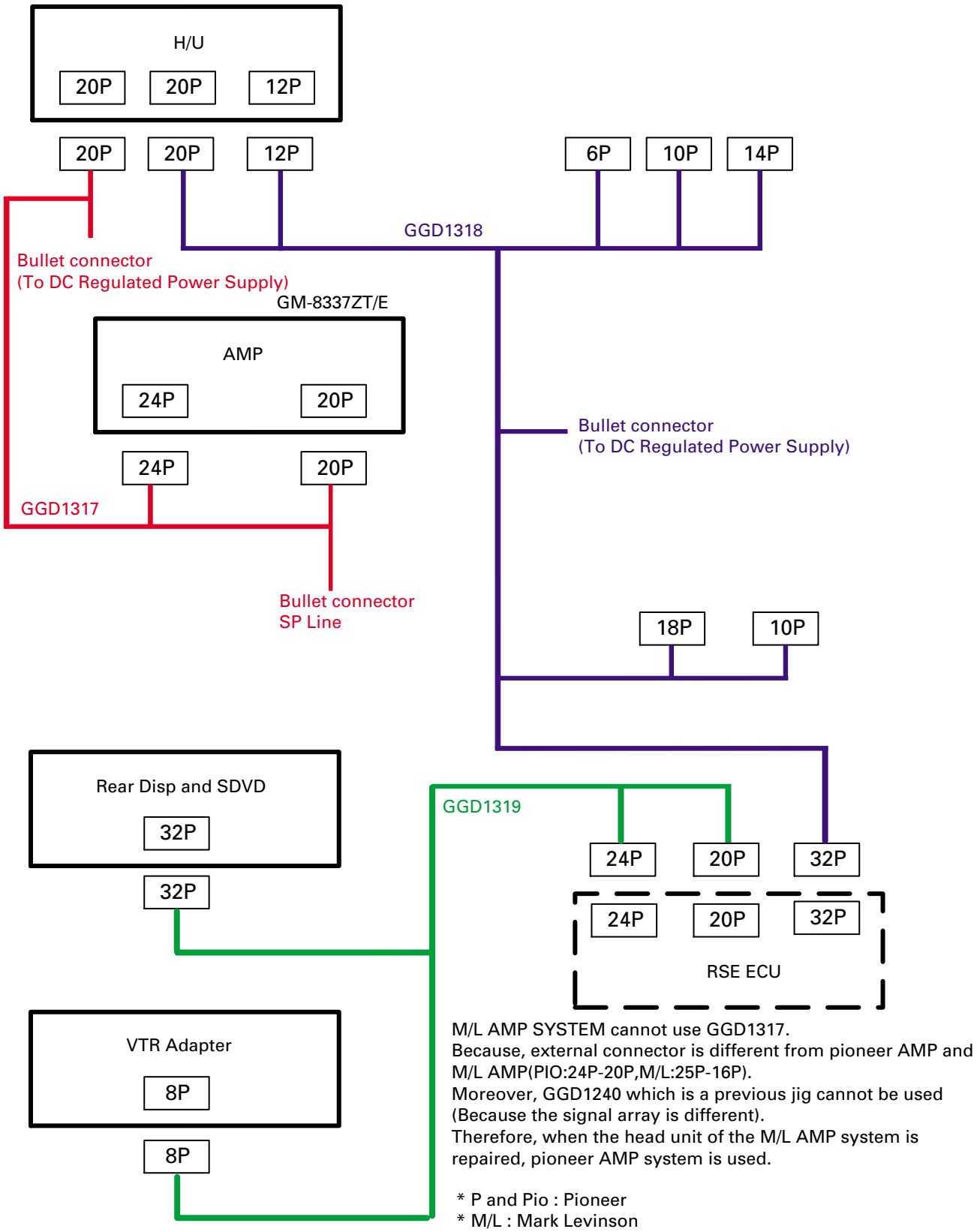

M/L AMP SYSTEM cannot use GGD1317.
Because, external connector is different from pioneer AMP and M/L AMP(PIO:24P-20P,M/L:25P-16P).
Moreover, GGD1240 which is a previous jig cannot be used (Because the signal array is different).
Therefore, when the head unit of the M/L AMP system is repaired, pioneer AMP system is used.

* P and Pio : Pioneer
* M/L : Mark Levinson

flashLAV
www.club-lexus.ru

● STANDARD SYSTEM(AMP:P ANDM/L)

FX-MG8227ZT/UC (Pio AMP Model)
FX-MG8327ZT/UC (M/L AMP Model)

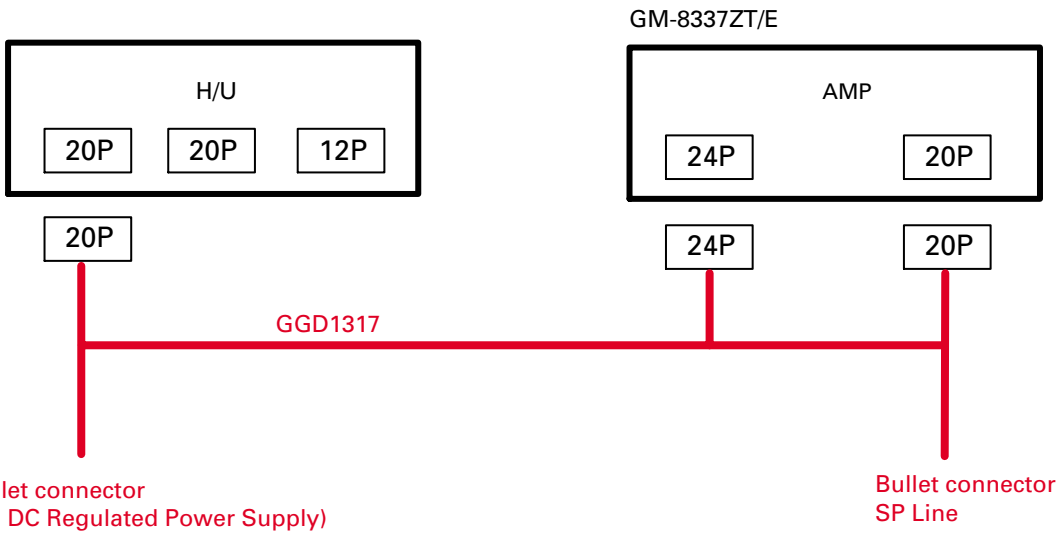

M/L AMP SYSTEM cannot use GGD1317.
Because, external connector is different from pioneer AMP and M/L AMP(PIO:24P-20P,M/L:25P-16P).
Moreover, GGD1240 which is a previous jig cannot be used (Because the signal array is different).
Therefore, when the head unit of the M/L AMP system is repaired, pioneer AMP system is used.

* P and Pio : Pioneer
* M/L : Mark Levinson

flashLAV
www.club-lexus.ru

6.2 AUDIO, TUNER ADJUSTMENT

● **Connection Diagram**

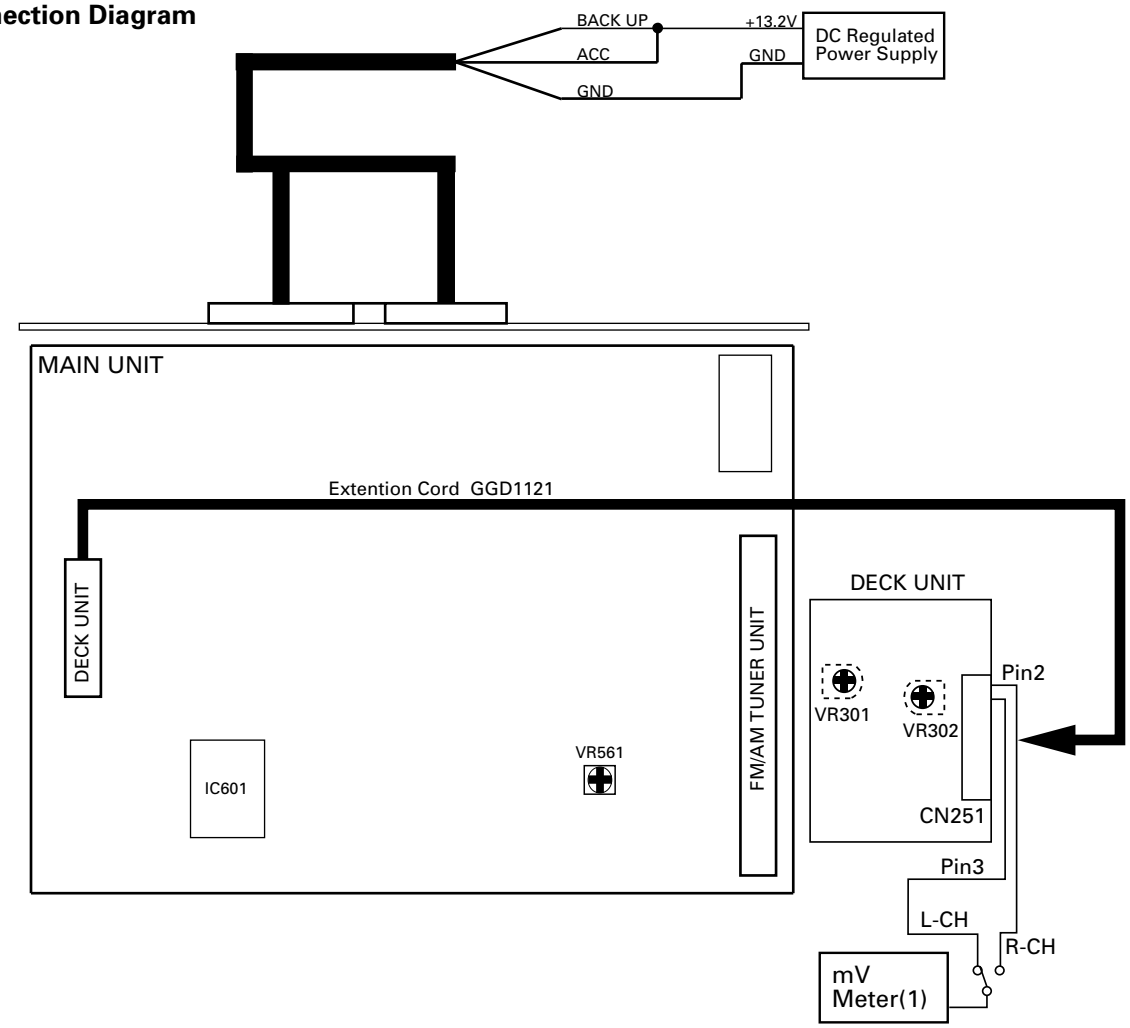

DOLBY B NR ADJUSTMENT

No.	Test Tape	Adjustment Point	Adjustment Method (Switch Position)
1	NCT-150 (400Hz,200nwb/m)	VR301(Lch),VR302(Rch)	mV Meter(1) : –8.24dBm(300mV)±1dB (DOLBY NR Switch : OFF)

flashLAV
www.club-lexus.ru

AM NOISE CANCELER ADJUSTMENT

Connection:

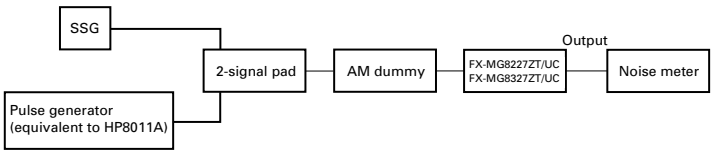

Setting of the pulse generator (setting of superimposed pulse)

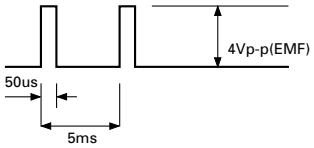

Pulse width :50usec
Pulse intervals :5msec
Pulse voltage :4Vp-p

Adjustment:

1. Setting of SSG
   Receiving frequency : 1,000 kHz
   Percentage modulation : 30%
   Modulation frequency : 400 Hz
   Antenna input : 74 dBuV (EMF)
2. Tune a RADIO to the "1,000kHz" with 1' condition.
3. Mix signal with the above-mentioned pulse and SSG moduration OFF.
4. Variable resistance adjust noise level to a minimam.
   Adjustment point : VR561

flashLAV
www.club-lexus.ru

6.3 TEST MODE

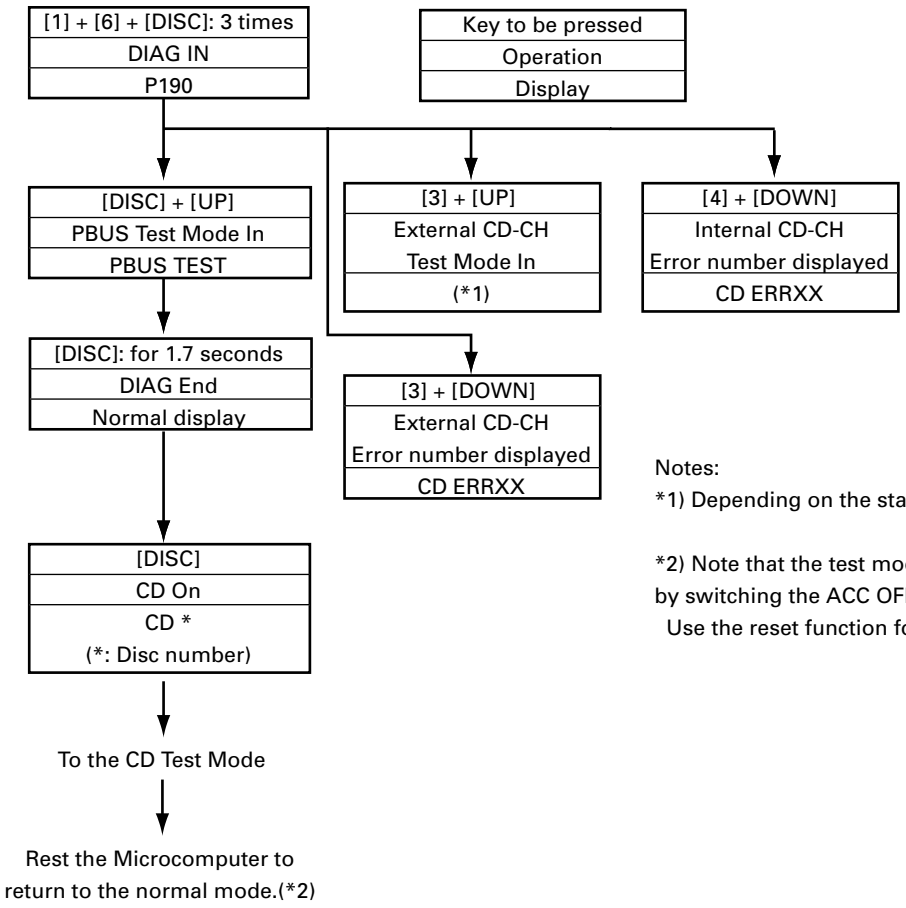

Notes:

*1) Depending on the state of DIAG

*2) Note that the test mode is cancelled in the system microcomputer by switching the ACC OFF and ON, but that it is not in the CD microcomputer. Use the reset function for complete cancellation of the test mode.

flashLAV
www.club-lexus.ru

6.4 CD ADJUSTMENT

1) Precautions on Adjustment

- The unit employs a single voltage (+5V) for the regulator, thus the reference potential of the signal is REFO (approximately 2.5V) rather than GND.
  Inadvertent contact of REFO and GND during adjustment can result not only in disabling normal potential measurement but also in exposing the pickup to strong impacts due to malfunctioning of the servo. Therefore, you are requested to observe the following precautions.
- Make sure that the negative probe of the measuring instrument is not connected to REFO or GND. Special care must be exercised so that the channel 1 negative probe may not be connected to the oscilloscope and the channel 2 negative probe to GND. Since the frame of the measuring instrument is usually at the same potential as the negative probe, the frame of the measuring instrument must be changed to floating status.
  When REFO is inadvertently connected to GND, you must immediately turn off the regulator or power supply.
- The regulator must be turned off before mounting or dismounting filters or wiring materials.
- You should not start adjustment or measurement immediately after the regulator is turned on. It is recommended to run the player for approximately one minute so that it may stabilize.
- When the test mode is turned on, various protective functions from the software become unavailable. Thus, you must make sure that undesirable electric or mechanical shocks are not be given to the system.
- This model employs a photo-transistor for detecting discs at their loading or ejection. Thus, if its outer case is removed during repair work and internal parts are exposed to light of strong intensity, malfunctions including the following can result:
  * The eject button becomes inoperable during play. Pressing the eject button does not eject a disc and play is continued.
  * Loading becomes unavailable.

  If a malfunction is recognized, appropriate remedial actions must be taken. Such actions include changing the light source position, changing the unit position and applying a cover to the photo-transistor.
- When you press the EJECT key to eject a disc, you must not touch any other key until the ejection is complete.
- If you press the UP or DOWN for the focus search in the test mode, you must turn the power off immediately. (Otherwise, the lens will be forced to stick to the top or bottom, potentially resulting in the burning of the actuator.)

2) Description of the Test Mode

- Turning on the Test Mode
  See page 72.
- Ending the Test Mode
  Apply the reset (the reset will be applied two minutes after the power is turned from off).
- Operation of TR JUMPs (except 100TR) continues after your finger has left the key. CRG, MOVE and 100TR JUMP are forced to the tracking close mode as soon as the key is released.
- Turning the power on or off resets the JUMP MODE to the Single TR.

flashLAV
www.club-lexus.ru

● Flow Chart

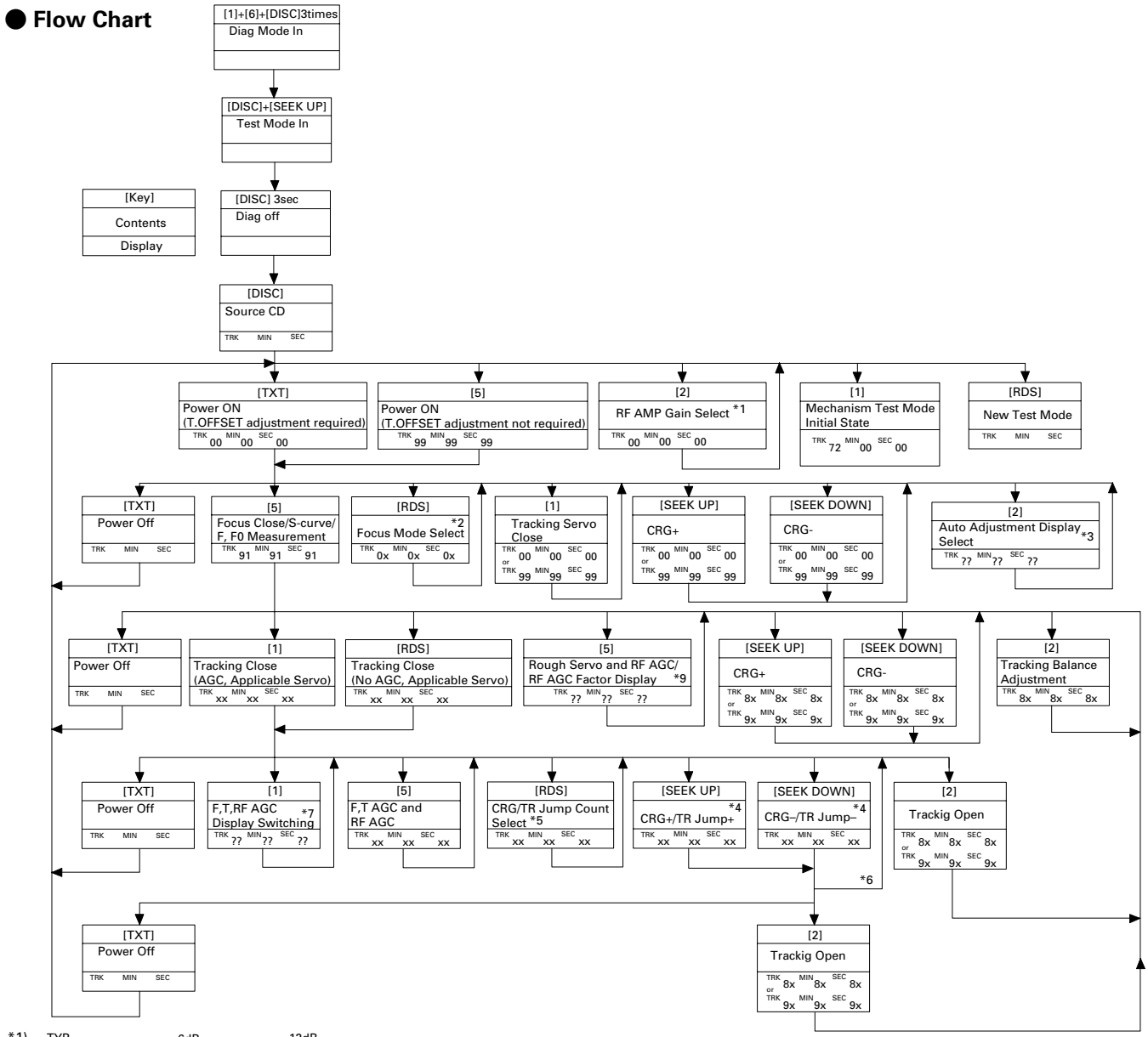

*1) TYP (TRK MIN SEC) → -6dB (TRK 06 MIN 06 SEC 06) → -12dB (TRK 12 MIN 12 SEC 12) → TYP

*2) Focus Close (TRK 00 MIN 00 SEC 00) (TRK 99 MIN 99 SEC 99) → S.Curve Check (TRK 01 MIN 01 SEC 01) → LD Off (TRK 02 MIN 02 SEC 02)

*3) F.Offset Display → RF Offset Display → T.Bal Display → Rough Servo. → F.Offset Display

(F.Cancel value
= (Upper 8 bits of the setting (7F[H] to 80[H] + 128)/4
= 63[D] to 32[D] to 00[D]).

*4) Single TR /4TR / 10TR / 32TR / 100TR

*5) Single TR 9X(8X):91(81) → 4 TR 92(82) → 10 TR 93(83) → 32 TR 94(84) → 100 TR 95(85) → CRG Move 96(86) → Single TR

*6) Only for the CRG Move and 100TR modes

*7) Track No. / Min / Sec → F.AGC Gain → T.AGC Gain → RF AGC Gain → Track No. / Min / Sec

(F.T. AGC Gain = (Current value/Initial value) x 20)

[Key]	Operation	
	Test Mode	New Test Mode
[TXT]	Power ON/OFF	Error occurrence time/ Cause display switching
[SEEK UP]	CRG+/TR Jump+ (Toward outer perimeter)	SEEK UP
[SEEK DOWN]	CRG-/TR Jump- (Toward inner perimeter)	SEEK DOWN
[1]	Tracking close and AGC and Applicable servo / AGC , AGC display switching	___
[2]	RF gain select / Offset adjustment display/ Tracking balance adjustment / Tracking open	___
[5]	Focus Close, S.Curve / Rough Servo/ RF AGC / F,T, RF AGC	___
[RDS]	Focus mode select / Tracking close / CRG·TR jump select	___
[LOAD]	DISC load	DISC load
[EJECT]	DISC eject	DISC eject
[4] (DISC UP)	DISC UP	DISC UP
[3] (DISC DOWN)	DISC DOWN	DISC DOWN

*8) CRG motor voltage : 2 [V]

*9)The first press displays the RF AGC coefficient. The second one or after performs the rough servo and RF AGC adjustments, and then displays the RF AGC coefficient.

- In all TR Jump modes except for 100TR, track jump operation continues even after the key is released. In the CRG Move and 100TR Jump modes, the tracking servo loop closes at the same time when the key is released.
- When the power is turned off and on, the jump mode, the RF AMP gain setting, and the auto adjustment values are reset to the Single TR (91),0dB, and the factory setting respectively.

Note: When you pressed the [SEEK UP] or [SEEK DOWN] key during the Focus Search, you must turn the power off immediately (otherwise, the lens can stick resulting in actuator damages).

flashLAV
www.club-lexus.ru

6.5 CHECKING THE GRATING AFTER CHANGING THE PICKUP UNIT

• **Note :**
The grating angle of the PU unit cannot be adjusted after the PU unit is changed. The PU unit in the CD mechanism module is adjusted on the production line to match the CD mechanism module and is thus the best adjusted PU unit for the CD mechanism module. Changing the PU unit is thus best considered as a last resort. However, if the PU unit must be changed, the grating should be checked using the procedure below.

• **Purpose :**
To check that the grating is within an acceptable range when the PU unit is changed.

• **Symptoms of Mal-adjustment :**
If the grating is off by a large amount symptoms such as being unable to close tracking, being unable to perform track search operations, or taking a long time for track searching.

• **Method :**

• Measuring Equipment	• Oscilloscope, Two L.P.F.
• Measuring Points	• E, F, REFO
• Disc	• ABEX TCD-784
• Mode	• TEST MODE

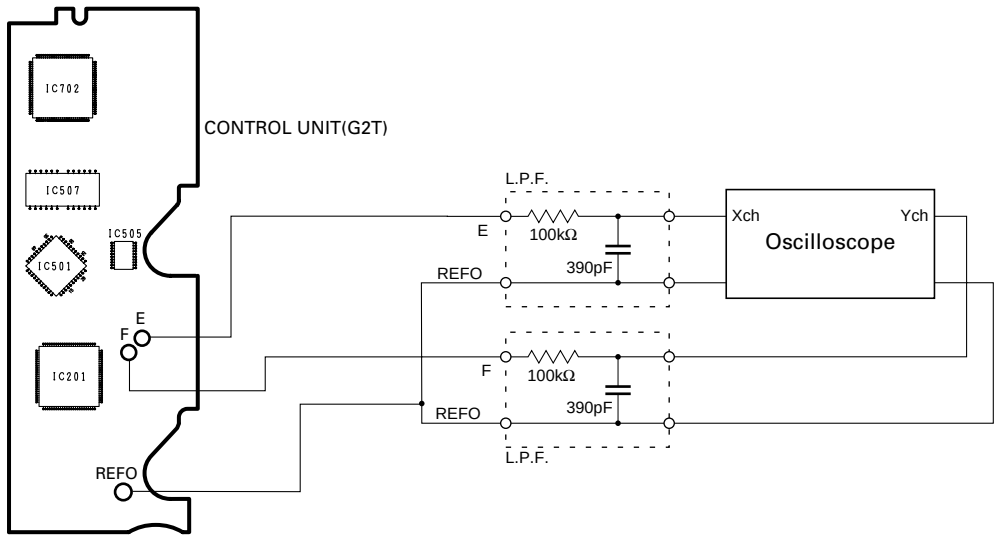

• **Checking Procedure**
1. In test mode, load the disc and switch the 5V regulator on.
2. Using the **SEEK UP** and **SEEK DOWN** buttons, move the PU unit to the innermost track.
3. Press key **5** to close focus, the display should read "91". Press key **2** to implement the tracking balance adjustment the display should now read "81". Press key **5** 4 times. The display will change, returning to "81" on the fourth press.
4. As shown in the diagram above, monitor the LPF outputs using the oscilloscope and check that the phase difference is within 75° . Refer to the photographs supplied to determine the phase angle.
5. If the phase difference is determined to be greater than 75° try changing the PU unit to see if there is any improvement. If, after trying this a number of times, the grating angle does not become less than 75° then the mechanism should be judged to be at fault.

• **Note**
Because of eccentricity in the disc and a slight misalignment of the clamping center the grating waveform may be seen to "wobble" (the phase difference changes as the disc rotates). The angle specified above indicates the average angle.

• **Hint**
Reloading the disc changes the clamp position and may decrease the "wobble".

flashLAV
www.club-lexus.ru

Grating waveform

Ech → Xch 20mV/div, AC
Fch → Ych 20mV/div, AC

0°

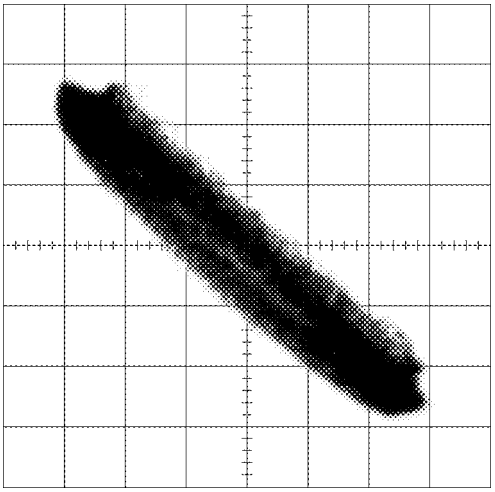

30°

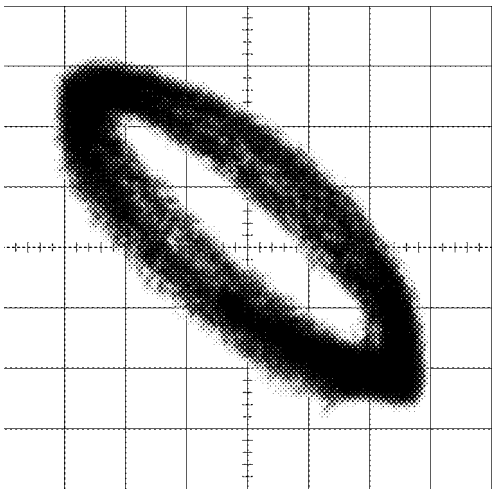

45°

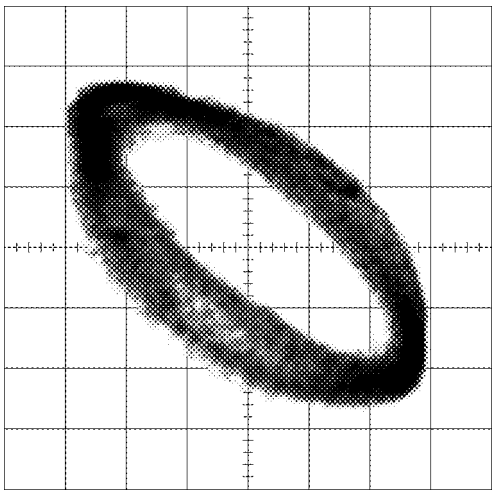

60°

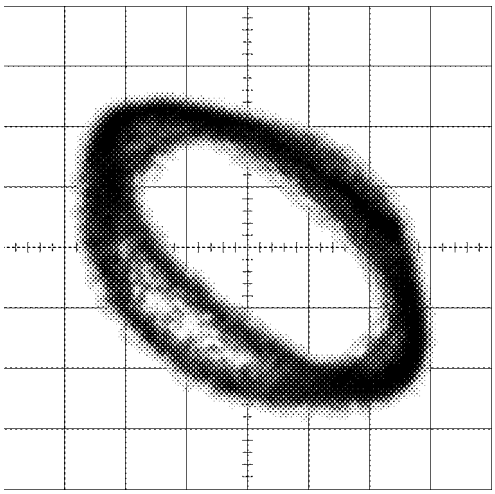

75°

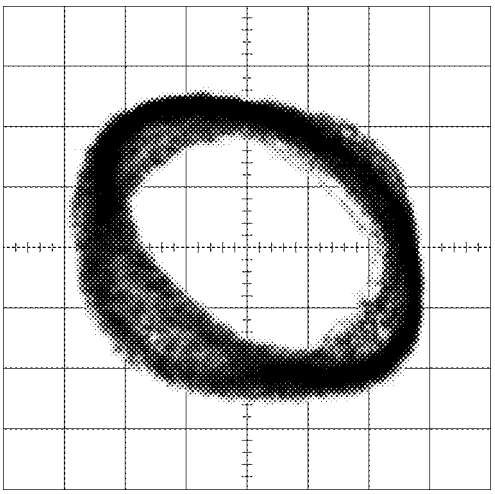

90°

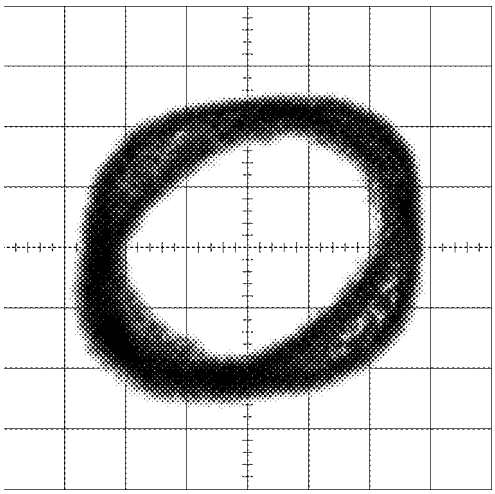

flashLAV
www.club-lexus.ru

6.6 TEST MODE(CD)

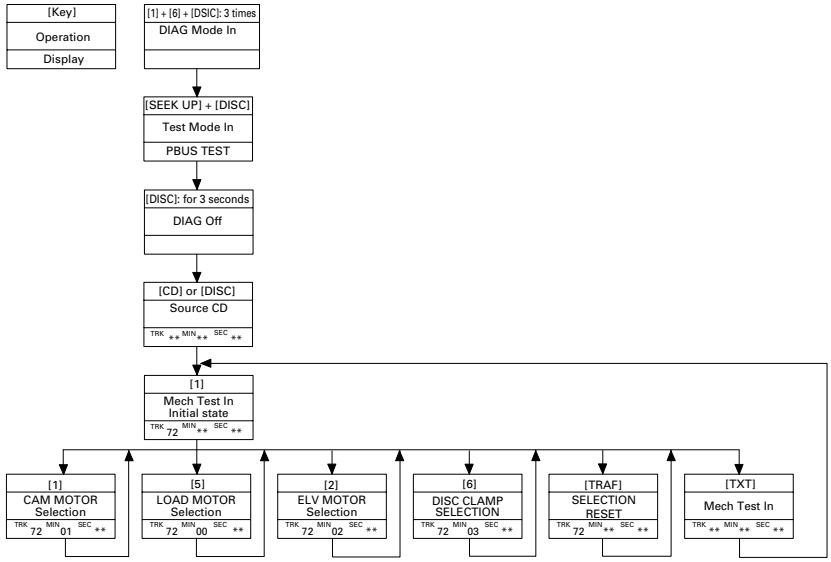

Manual test

Select the motor you desire to move by using one of the following four keys: [1], [2], [5], and [6].
After selecting the motor, use the [SEEK UP] or [SEEK DOWN] key tomove the selected motor. While the key is being pressed, the motor will keep moving.

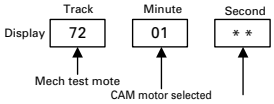

1. To select the CAM motor, press the key [1].
For the CAM PLAY direction, use the key [SEEK UP].
For the CAM ELV direction, use the key [SEEK DOWN].

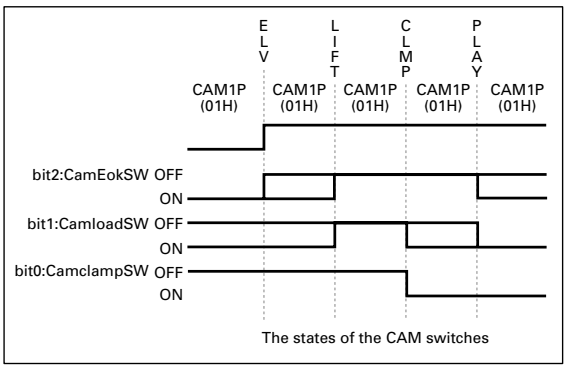

Key	Operation
[TXT]	To the mech test initial state
[SEEK UP]	Moves the motor selected by one of the keys B3H to B6H, in the FWD direction. The motor keeps moving while the key is pressed.
[SEEK DOWN]	Moves the motor selected by one of the keys B3H to B6H, in the REV direction. The motor keeps moving while the key is pressed.
[1]	Selects the CAM motor.
[2]	Selects the ELV motor.
[5]	Selects the LOAD motor.
[6]	Selects the DISC CLAMP.
[TRAF]	Selection reset.

2. To select the ELV motor, press the key [2].
For the ELV UP direction, use the key [SEEK UP].
For the ELV DOWN direction, use the key [SEEK DOWN].

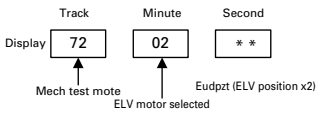

3. To select the LOAD motor, press the key [5]. (Default)
For loading, use the key [SEEK UP].
For ejection, use the key [SEEK DOWN].

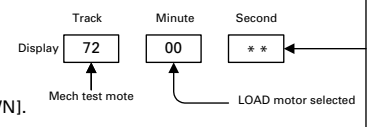

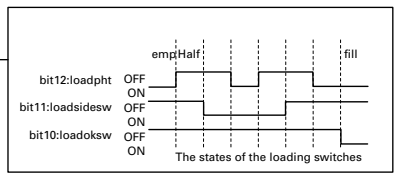

4. To select the SPDL claws, press the key [6].
Caution: SPDL claw test should be performed in the servo test mode. The SPDL claws are controlled by the servo systems and the switches conditions cannot be checked in the mechanical test mode.

To open the claws, use the key [SEEK UP].
To close the claws, use the key [SEEK DOWN].

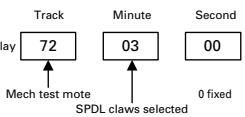

Durability test
To enter the durability test modes, press the key [TRAF].
To exit from the test modes, press one of the keys [1], [2], [5], and [6].

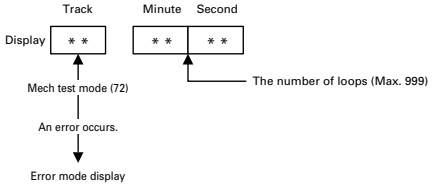

1. LOAD durability test (Load <-> Eject)
At the door open position (disc insertion/eject position), insert a disc and press the key [TRAF].

2. CAM durability test (Play <-> ELVOK)
At any position between CAM4P and CAM5P (display: 06, 04), press the key [TRAF].

3. LIFT durability test (Current disc <-> Door Open)
At any position between CAM2P and CAM3P (display: 05, 07), press the key [TRAF].

4. ELV durability test (ELV1F <-> 6F)
At the CAM1P position (display: 01), press the key [TRAF].
.

flashLAV
www.club-lexus.ru

● Electrical and servo errors

Mode	Digit	Code	Name	Descriptions	AVC-LAN error code
Electrical error	1,2	A0	VD power NG	VD power abnormal	ERROR 4
	1,2	A1	Mech Vref NG	Mech elevation reference voltage abnormal	ERROR 4
	3,4			At the occurrence of error, motor control output (*6)	
Servo error	1,2	10	Carriage home NG	The CRG cannot move to inner tracks or move from inner tracks.	ERROR 3
	1,2	11	Focus search NG	No focus	ERROR 1
	1,2	12	Spindle Lock NG Subcode	No spindle lock. Sub codes cannot be read.	ERROR 1
	1,2	14	Mirror NG	Not applicable to the G2 mech.	
	1,2	17	Setup NG	AGC protection does not function. Focus is easily unlocked.	ERROR 1
	1,2	19	Tracking Balance NG	Not applicable	
	1,2	30	Search time-out	Cannot reach the target address.	ERROR 1
	3			At the occurrence of error, claw switch value	
	4			The rotation rate does not satisfy the spec.	

● Mechanical errors

Mode	Digit	Code	Name	Descriptions	AVC-LAN error code
Waiting for disc pulled out	1,2	20		CAMRST→Forced ejection→Waiting for disc pulled out	ERROR 3
	1,2	21		WTLOAD→Forced ejection→Waiting for disc pulled out	ERROR 3
	1,2	22		EJCTON→Forced ejection→Waiting for disc pulled out	ERROR 3
	1,2	23		SEJPCK→Forced ejection→Waiting for disc pulled out	ERROR 3
	1,2	24		HLFLOAD→Forced ejection→Waiting for disc pulled out	ERROR 3
	1,2	25		DINSRDY→Forced ejection→Waiting for disc pulled out	ERROR 3
	1,2	26		LIFTDN→LIFTUP→Forced ejection→Waiting for disc pulled out	ERROR 3
	3			The m2stat value at the original error followed by forced ejection (*3)	
	4			The LOAD SW value (3 bits) at the forced ejection end:	
CAM Err	1,2	51	MFWDTO	CAM motor FWD time-out error during TRAY UP operation	ERROR 3
	1,2	52	MREVTO	CAM motor REV time-out error during TRAY UP operation	ERROR 3
	1,2	5a	MFWDTO	CAM motor FWD time-out error during TRAY DN operation	ERROR 3
	1,2	5b	MREVTO	CAM motor REV time-out error during TRAY DN operation	ERROR 3
	1,2	5e	MFWD2TO	CAM motor FWD2 time-out error during TRAY DN operation	ERROR 3
	1,2	61	MFWDTO	CAM motor FWD time-out error during CRG OUT operation	ERROR 3
	1,2	62	MREVTO	CAM motor REV time-out error during CRG OUT operation	ERROR 3
	1,2	64	MLSWNG	LOAD SW ON stuck error during CRG OUT operation	ERROR 3
	1,2	66	MREV2TO	CAM motor REV2 time-out error during CRG OUT operation	ERROR 3
	1,2	6a	MFWDTO	CAM motor FWD time-out error during CRG IN operation	ERROR 3
	1,2	6b	MREVTO	CAM motor REV time-out error during CRG IN operation	ERROR 3
	1,2	71	MFWDTO	CAM motor FWD time-out error during ELV IN operation	ERROR 3
	1,2	72	MREVTO	CAM motor REV time-out error during ELV IN operation	ERROR 3
	1,2	7a	MFWDTO	CAM motor FWD time-out error during ELV OUT operation	ERROR 3
	1,2	7b	MREVTO	CAM motor REV time-out error during ELV OUT operation	ERROR 3
	1,2	7d	MLSWNG	LOAD SW ON stuck error during ELV OUT operation	ERROR 3
	1,2	7f	MREV2TO	CAM motor REV2 time-out error during ELV OUT operation	ERROR 3
	1,2	81	MFWDTO	CAM motor FWD time-out error during EIN_EXP operation	ERROR 3
	1,2	82	MREVTO	CAM motor REV time-out error during EIN_EXP operation	ERROR 3
	1,2	8a	MFWDTO	CAM motor FWD time-out error during CIN_EXP operation	ERROR 3
	1,2	8b	MREVTO	CAM motor REV time-out error during CIN_EXP operation	ERROR 3
	1,2	aa	MOVERCNT	CAM SW has not been determined during CAM operation (Chatter remains.)	ERROR 3
	3			The OK stop position at the last elevation operation (*4)	
	4			The CAM SW value (3 bits) before retry (with the first error)	
CAMRST Err	1,2	91	MFWDTO	ELV motor FWD time-out error during CAMRST operation	ERROR 3
	1,2	92	MREVTO	ELV motor REV time-out error during CAMRST operation	ERROR 3
	1,2	93	MOVERCNT	Over-count error during CAMRST operation	ERROR 3
	1,2	94	MSPDERR	The claws do not close during CAMRST operation.	ERROR 3

flashLAV
www.club-lexus.ru

Mode	Digit	Code	Name	Descriptions	AVC-LAN error code
	1,2	96	MREV2TO	Overrun error during CAMRST operation	ERROR 3
	3			The CAM SW value (3 bits) before operation	
	4			The ELV stop position before operation (*5)	
Claw Err	1,2	9a	MSPDERR	The claws do not close during DSKFREE operation.	ERROR 3
	1,2	9b	MSPDERR	The claws do not open during DSKLOCK operation.	ERROR 3
	1,2	9c	MSPDERR	The claws do not close during CLWCLSE operation.	ERROR 3
	1,2	9d	MSPDERR	The claws do not open during CLWOPEN operation.	ERROR 3
	3			The CAM SW value (3 bits) with the claw error	
	4			The CLAW SW values before and after the error stop (2 bits each)	
DISCSEL Err	1,2	b1	MFWDTO	ELV motor FWD time-out error during DISCSEL operation	ERROR 3
	1,2	b2	MREVTO	ELV motor REV time-out error during DISCSEL operation	ERROR 3
	1,2	b3	MOVERCNT	Over-count error during DISCSEL operation	ERROR 3
	1,2	b6	MREV2TO	Overrun error during DISCSEL DISC operation	ERROR 3
	3			The target disc No.	
	4			The ELV error stop position before retry (*5)	
LIFT Err (*2)	1,2	c1	MFWDTO	ELV motor FWD time-out error during LIFT UP operation	ERROR 3
	1,2	c2	MREVTO	ELV motor REV time-out error during LIFT UP operation	ERROR 3
	1,2	c3	MODERCNT	Over-count error during LIFT UP operation	ERROR 3
	1,2	c6	MREV2TO	Overrun error during LIFT UP operation	ERROR 3
	1,2	d1	MFWDTO	ELV motor FWD time-out error during LIFT DN operation	ERROR 3
	1,2	d2	MREVTO	ELV motor REV time-out error during LIFT DN operation	ERROR 3
	1,2	d3	MOVERCNT	Over-count error during LIFT DN operation	ERROR 3
	1,2	d4	MLSWNG	DISC IN (SIDE SW ON) is sensed during door close operation.	ERROR 3
	1,2	d6	MREV2TO	Overrun error during LIFT DN operation	ERROR 3
	1,2	d7	MLSW2NG	"Pinched disc" is sensed during LIFT DN operation (within the range of +/-1LSB, 200ms continued)	ERROR 3
	3			Current disc No.	
	4			The ELV error stop position before retry (*5)	
error ERROR 3	1,2	90	BACKUP_NG	CAMRST→Forced ejection→Door open/close error	ERROR 3
	1,2	eb	MLSWNG	LOAD SW error during HLFLOAD operation	ERROR 3
	1,2	ed	MLSWNG	LOAD SW error during SEJPCK operation	ERROR 3
	1,2	fb	MLSWNG	LOAD SW error during DINSRDY operation	ERROR 3
	1,2	e0	BACKUP_NG	Backup NG during EJCTON operation	ERROR 3
	1,2	e2	MREVTO	MREVTO error during EJCTON operation	ERROR 3
	1,2	e6	MREV2TO	MREV2TO error during EJCTON operation	ERROR 3
	1,2	f0	BACKUP_NG	Backup NG during WTLOAD operation	ERROR 3
	1,2	f1	MFWDTO	MFWDTO time-out error during WTLOAD operation	ERROR 3
	1,2	f2	MREVTO	SIDE SW ON with OK SW ON waiting retry during WTLOAD operation	ERROR 3
	1,2	f3	MCHTERR	Incomplete insertion error during WTLOAD operation	ERROR 3
	1,2	f4	MLSWNG	OK SW ON but PHOTO ON during WTLOAD operation	ERROR 3
	1,2	f5	MFWD2TO	MFWD2TO time-out error during WTLOAD operation	ERROR 3
	1,2	f6	MREV2TO	OK SW ON waiting retry (3 times) during WTLOAD operation	ERROR 3
	1,2	f7	MLSW2NG	SIDE SW ON at the OK SW ON waiting mode during WTLOAD operation	ERROR 3
	1,2	ab	MOVERCNT	The LOAD SW has not been determined during insertion/loading operation (Chatter remains.)	ERROR 3
	3			The LOAD SW value (3 bits) at the FEJCHK end	
	4			The ELV stop position at the FEJCHK end (*5)	
New test mode	1,2	40	New test mode	Focus NG after servo close	ERROR 1
	1,2	41	New test mode	Lock NG after servo close	ERROR 1
	1,2	42	New test mode	Sub code NG after servo close	ERROR 1
	1,2	43	New test mode	Not applicable to the G2 mechanism.	ERROR 1
	3			The claw SW value at the occurrence of error	
	4			The rotation rate does not satisfy the spec.	

flashLAV
www.club-lexus.ru

Notes:
*1) Insertion/ejection error is output only when door open/close error occurs with forced eject.

*2) LIFT error is output under the following conditions:
LIFTDN --> TLFTUP --> forced eject --> door open/close error

*3) The values of m2stat:
B.upNg=0, FwdTo=1, RevTo=2, Chata=3, OverCnt=4, SwNg=5, SpdNg=6,
Fwd2To=7, Rev2To=8, Sw2Ng=9

*4) The last results of chatter check (compared with the target center):
+8LSB=1, +7LSB=2, +6LSB=3, +5LSB=4, +4LSB=5, +3LSB=6, +2LSB=7,
+1/0LSB=8, -1/0LSB=8,-2LSB=9, -3LSB=a, -4LSB=b, -5LSB=c, -6LSB=d, -7LSB=e, -8LSB=f,
the others=0

*5) Basically the value of eudpzt except for the following case:
In case of eudpzt=1 and door close mode, eudpzt=e

*6) bit0: P_lo1, bit1: P_lo2, bit2: P_elv1, bit3: P_elv2, bit4: P_cg1, bit5: P_cg2,
bit6: P_elv_vol, bit7: P_lod_vol

flashLAV
www.club-lexus.ru

●Operations and functions

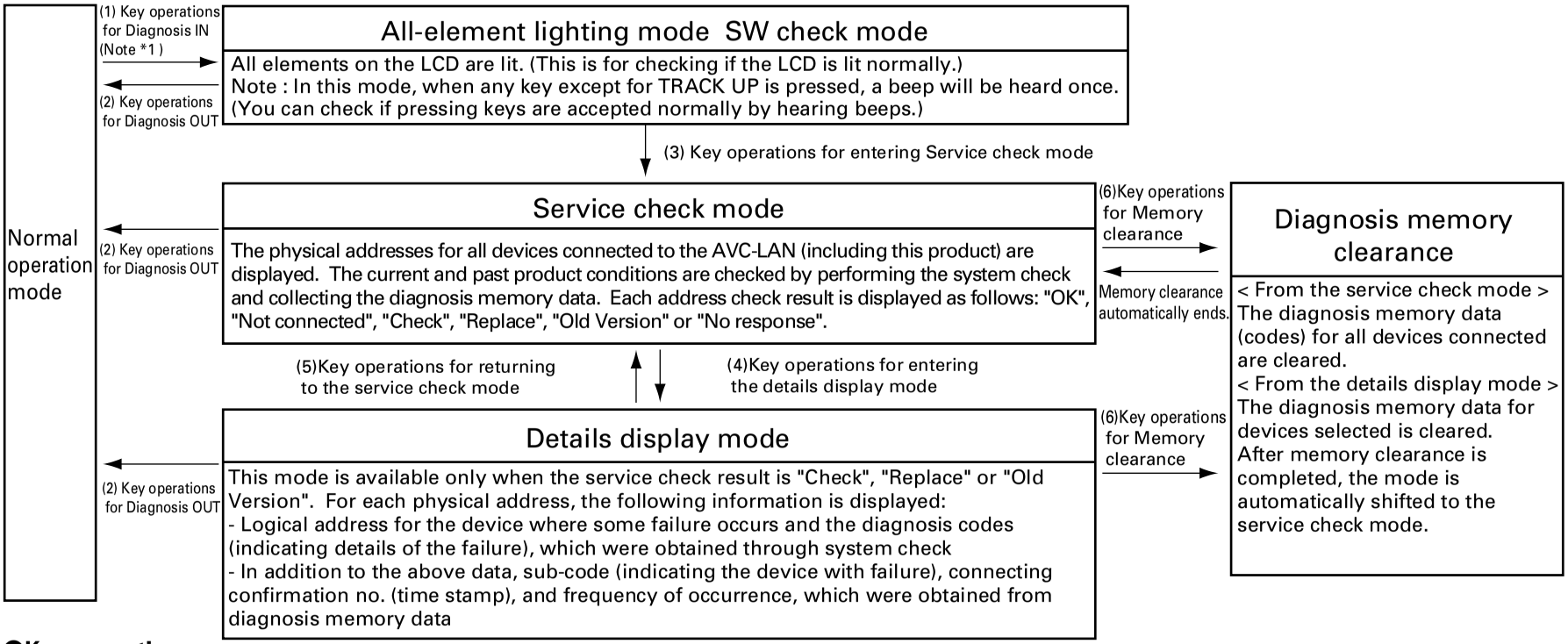

●Key operations

(1) Diagnosis IN With three times of beep sound, the mode change operation completes.	While pressing the CH1 and CH6 buttons simultaneously, press the DISC button three times.
(2) Diagnosis OUT	Keep the DISC button pressed for 1.7 seconds or more and turn the ACC switch OFF.
(3) Entering the Service check mode. With a beep sound, the mode change completes.	Press the TRACK UP button.
(4) Entering the Details display mode.	Press the CH2 button.
(5) Returning to the service check mode.	Press the CH3 button.
(6)Clearing the Memory data	Keep the CH5 button pressed for 1.7 seconds or more.
Change the display (forward)	Press the TRACK UP button.
Change the display (backward)	Press the TRACK DOWN button.

Note *1: To enter the diagnosis IN mode, use the buttons on the head unit.

flashLAV
www.club-lexus.ru

●Diagnosis mode display

Service check mode

After system check completes, the check results for the devices connected to the AVC-LAN are displayed in turn in order of physical address number as follows:

◆"Physical address"
...The smallest physical address number is displayed first, whose check result will follow it.
Ex. P190
- P190: Physical address number (radio cassette)
- The physical address is displayed.

◆"Check result"
...The check result is displayed.
Ex. good Normal (OK)
ECHn Replace
CHEC Check
OLd Old Version
→ Details display mode

◆"Physical address"
...The next physical address number is displayed.

◆"Connecting confirmation no. (current)"
...The AVC-LAN time stamp is displayed.

Ex. no01
- no01: The connecting confirmation number is displayed.
- The current connecting confirmation number (expressed in the hexadecimal number system by using 00 to FF)

The number increases by one each time one minute passes. When 256 minutes pass, the indication returns to 00.

Details display mode (only in case of "Replace", "Check", or "Old Version")

This mode is available only when the service check result is "Replace", "Check" or "Old Version".
To select this mode, press the CH2 key.

◆"Physical address (for selected devices)"
The physical address number is displayed, whose check result details will follow it.
Ex. _ P360
- P360: Physical address number (CD-CH)

◆ "Diagnosis data source"
The detailed items depend on the data source.

Ex. SyS The data was obtained from system check.

◆ "Logical address"
The logical address number for the device with failure is displayed.
Ex. 1L_63
- 1L_63: Logical address number (CD-CH)
- The logical address is displayed.
- Serial number

◆ "Diagnosis code"
The diagnosis code indicates what problem occurs.
Ex. 1d_45
- 1d_45: Diagnosis code (abnormal EJECT)
- The diagnosis code is displayed.

Ex. COdE The data was obtained from diagnosis memory data.

◆ "Logical address"...The same as that for the SyS data
◆ "Diagnosis code"...The same as that for the SyS data
◆ "Sub code"...This code indicates the device with failure.
Ex. 1P_190
- 1P_190: The sub code is displayed.

◆ "Connecting confirmation number (when some failure occurs)"... AVC-LAN time stamp
Ex. no01
- no01: The connecting confirmation number (expressed in the hexadecimal number system by using 00 to FF)
- The connecting confirmation number is displayed.

◆ "Frequency of occurrence"
...The frequency of failures occurred
Ex. 1c_15
- 1c_15: The frequency of occurrence expressed in the decimal number system.
- The frequency of occurrence is displayed.

If there are two or more diagnosis codes, the diagnosis data display will continue.

flashLAV
www.club-lexus.ru

Physical address allocation

② →

①\1	0	1	2	3	4	5	6	7	8	9	A	B	C	D	E	F
0	M.DISP computer	New EMV	New device with AV	New MM ECU	device with AV				Audio ECU	Audio H/U	DVD-P	Rear TV	Rear Control SW	Multi-CD decoder	CD-CH commander	AMP controlled radio tuner
2													Europe GW ECU			
4												1-DIN Navigation	Consolidated inside panel	Simple LCD	Consolidated SW	
6													Gateway ECU			RSE-M
8			New 1-DIN TV		Europe navigation DISP.M/U		Rear TV with movie mode	Navigation with controls				DISPLAY with SW	FM multiplex DISPLAY	Fr controlled SW	MD-CH commander	
C								MONET ECU					Steering SW	Navigation remote controller	Body computer	
E								Vehicle Information ECU								
1,3,5,7, 9-B,D,F																

Display
P①②③
Ex.P190
Physical address

①\2	0	1	2	3	4	5	6	7	8	9	A	B	C	D	E	F
0	Navigation computer	ATIS	VICS	TV tuner	H/W CD-CH	H/W DVD-CH	TEL information ECU		Camera controller							
8						DVD deck										
1-7, 9-F																

①\3	0	1	2	3	4	5	6	7	8	9	A	B	C	D	E	F
0	Radio		Cassette	Radio cassette with no CH controller	CD-P		1DIN CD-CH		MD-P		MD-CH		DAT		DCC	
8																TEL ECU
1-7, 9-F																

①\4	0	1	2	3	4	5	6	7	8	9	A	B	C	D	E	F
0	Equalizer				DSP				H/W AMP							
1-F																

①\5	0	1	2	3	4	5	6	7	8	9	A	B	C	D	E	F
0	GPS receiver	ATIS decoder	FM multiplex decoder		CD-CH		MD-CH		CD-ROM -CH		MD-ROM -CH		TEL information			
8			Radio wave beacon										May Day			
C			Optical beacon													
1-7,9-8,D-F																

①\6	0	1	2	3	4	5	6	7	8	9	A	B	C	D	E	F
0	A/C computer								Body computer							
1-F																

flashLAV
www.club-lexus.ru

Diagnosis code table

Logical address name	Logical address	Diagnosis code	Diagnosis details
Communi-cation control	01H	00	No diagnosis
		01	Abnormal reset
		10	Abnormal +B
		11	Abnormal ACC
		12	Abnormal MUTE
		13	Fuse broken
		20	Microcomputer - abnormal
		21	ROM - abnormal
		22	RAM - abnormal
		23	Bus - abnormal
		24	F-ROM - abnormal
		25	V-RAM - abnormal
		26	Gate allay abnormal
		27	Paint controller abnormal
		28	Backup memory abnormal
		29	Voice output controller abnormal
		2A	Internal power supply abnormal
		30	Sync signal abnormal (input)
		31	Sync signal abnormal (output)
		D0	ECU not connected
		D1	Transmission abnormal
		D2	Connecting confirmation: abnormal
		D4	Connecting confirmation: no response
		D5	Registered device data missing (History of registered devices)
		D6	Master unavailable
		D7	Connecting confirmation: abnormal
		D8	Connecting confirmation: no response
		D9	Last mode abnormal
		DA	Command/order: no response
		DB	Mode status abnormal
		DC	Transmission fault
		DD	Master reset
		DE	Slave reset
		DF	Master abnormal
		E0	Registration completion acknowledgement error
		E1	Voice processor ON abnormal
		E2	ON/OFF command or parameter abnormal
		E3	Registration command transmission
		E4	Multiple frames intermit.
		FF	Diagnosis - no response

Logical address name	Logical address	Diagnosis code	Diagnosis details
Radio	60H	10	AM tuner PLL unlocked
		11	FM tuner PLL unlocked
		40	No antenna connected
		41	Antenna power supply abnormal
		42	Tuner power supply abnormal
		43	AM tuner abnormal
		44	FM tuner abnormal
		45	SW tuner abnormal
TV tuner	40H	10	TV tuner PLL unlocked
		11	FRONTEND abnormal
		40	TV divergence shifting error
		41	TV – no reception
		42	VNR screen error
		43	No antenna connected
		44	Antenna power supply abnormal
		45	SEL +B current – small
		46	SEL +B current – large
Cassette tape	61H	10	Belt broken
		40	Mechanical failure or cassette broken
		41	EJECT failure
		42	TAPE jamming
		43	Dirty head
		44	Mech power supply abnormal
CD CD-P CD-CH	43H 62H 63H	10	CD Mech abnormal
		11	CD loading/unloading abnormal
		12	CD lead-in abnormal
		40	No disc loaded
		41	Incorrect disc
		42	Disc unreadable
		43	CD-ROM abnormal
		44	CD abnormal
		45	EJECT abnormal
		46	Scratches or non-recorded side
		47	CD high temperature detected
		48	Excessive current detected
		50	Tray IN/OUT abnormal
		51	Elevator abnormal
		52	Clamp abnormal
MD MD-CH	64H 65H	10	MD mech abnormal
		11	MD IN/OUT abnormal
		12	MD lead-in abnormal
		40	No disc loaded
		41	Incorrect disc
		42	Disc unreadable
		43	MD-ROM abnormal
		44	MD abnormal
		45	EJECT error
		46	Scratches or non-recorded side
		47	MD high temperature detected
		48	Excessive current detected
		50	Tray IN/OUT abnormal
		51	Elevator abnormal
		52	Clamp abnormal

Logical address name	Logical address	Diagnosis code	Diagnosis details
Navigation /GPS	58H 80H	10	Gyroscope abnormal
		11	GPS receiver abnormal
		12	RTC abnormal
		13	SS section abnormal
		14	No Time updating
		15	TCXO abnormal
		16	PLL lock abnormal
		40	GPS antenna abnormal
		41	GPS antenna power supply abnormal
		42	Map disc reading abnormal
		43	SPD signal abnormal
		44	Player abnormal
		45	High temperature abnormal
FM multiplex (VICS), radio wave beacon, beacon, optical beacon, FM multiplex (data), and FM multiplex tuner	5AH 84H 5BH 83H 82H 9AH	41	Antenna power supply abnormal
		45	Radio wave beacon - no antenna connected
		46	Optical beacon - no antenna connected
		47	No FM antenna connected
		4A	FM receiver abnormal
		4B	Radio wave beacon abnormal
		4C	Optical beacon abnormal
Voice control	85H	40	Voice-control activation SW abnormal
		41	Voice-control Microphone abnormal
Extended communi-cation	02H	40	Multi-CD-CH (optical cable) abnormal
		41	Multi-CD-CH (optical cable) not connected
		42	Multi-CD-CH (CarNet) abnormal
		43	Multi-CD-CH (CarNet) not connected
		50	HIT64 communication not connected
		51	HIT64 communication abnormal
		52	HIT64 BRQ disconnection
		53	HIT64 BRQ short-circuit
		54	HIT64 disconnection
		55	CarNet communication not connected
		56	CarNet communication abnormal
		57	CarNet periodical communication abnormal
Information display/front monitors	32H 34H	10	Video circuit abnormal
		11	Back light abnormal (with no current)
		12	Back light abnormal (with excessive current)
		13	Panel open/close mechanical operation abnormal
		40	Front seat monitor abnormal
		41	Heater abnormal
SW, Audio SW, SW shifting, Command SW	21H 23H 24H 25H	10	Panel SW abnormal
		11	Touch SW failure

flashLAV
www.club-lexus.ru

7. GENERAL INFORMATION

7.1 DIAGNOSIS

7.1.1 DISASSEMBLY

● **Removing the Grille Assy (Fig.1)**

*) This model is different partially from this photo.

1 Remove the four screws.

Disconnect the connector and then remove the Grille Assy.



When reassembling:
While putting Knob units back on each place, steady each PCB behind (Right PCB, Left PCB) with your other hand because the PCB is fragile.

Fig.1

● **Removing the Frame (Fig.2)**

1 Remove the five screws and then remove the Frame.

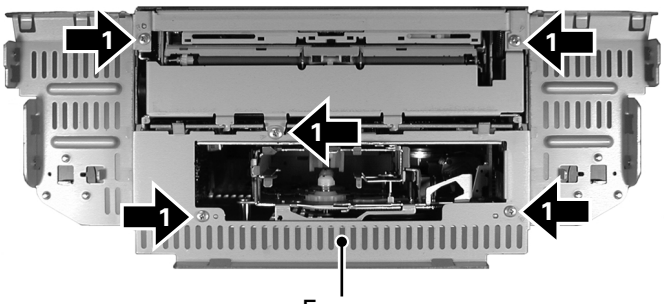

Fig.2

● **Removing the Chassis (Fig.3)**

1 Remove the eight screws.

Disconnect the connector and then remove the Chassis.

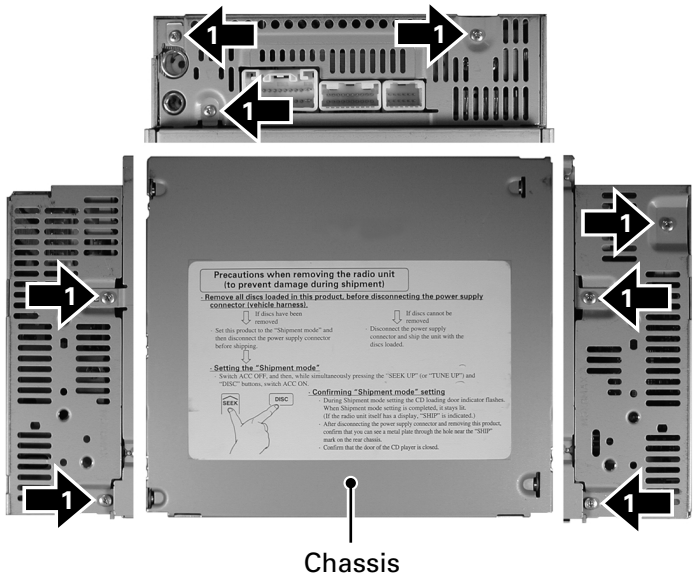

Fig.3

flashLAV
www.club-lexus.ru

● Removing the Cassette Mechanism Module (Fig.4)

1 Remove the four screws and then remove the Cassette Mechanism Module.

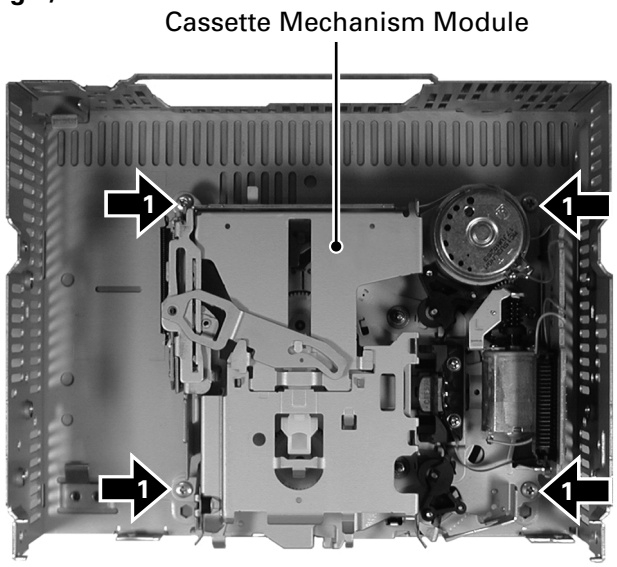

Fig.4

● Removing the Main Unit (Fig.5)

1 Straight the tabs at three locations indicated.

2 Remove the two screws and then remove the Main Unit.

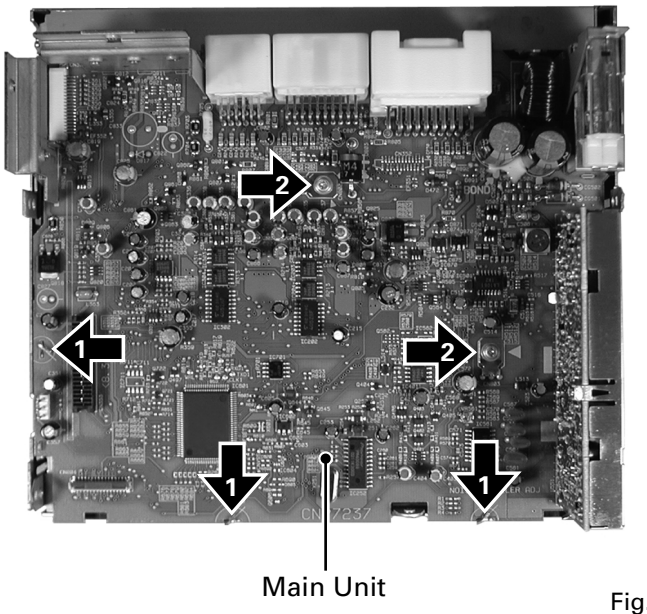

Fig.5

flashLAV
www.club-lexus.ru

● **Removing the Control Unit(G2T) (Fig.6)**

1. Remove the eight screws and then remove the Case.
2. Apply shorting solder to the PU flexible cable before disconnecting it from the connector.
3. Disconnect the connector.
4. Remove the two screws B.
5. Remove the Control Unit(G2T).

● **Removing the CD Mechanism Unit (Fig.6)**

1. Remove the two springs A and two springs B.
2. Remove the three screws A and then remove the Bracket Unit.
3. Remove the four Dampers and then remove the CD Mechanism Unit.

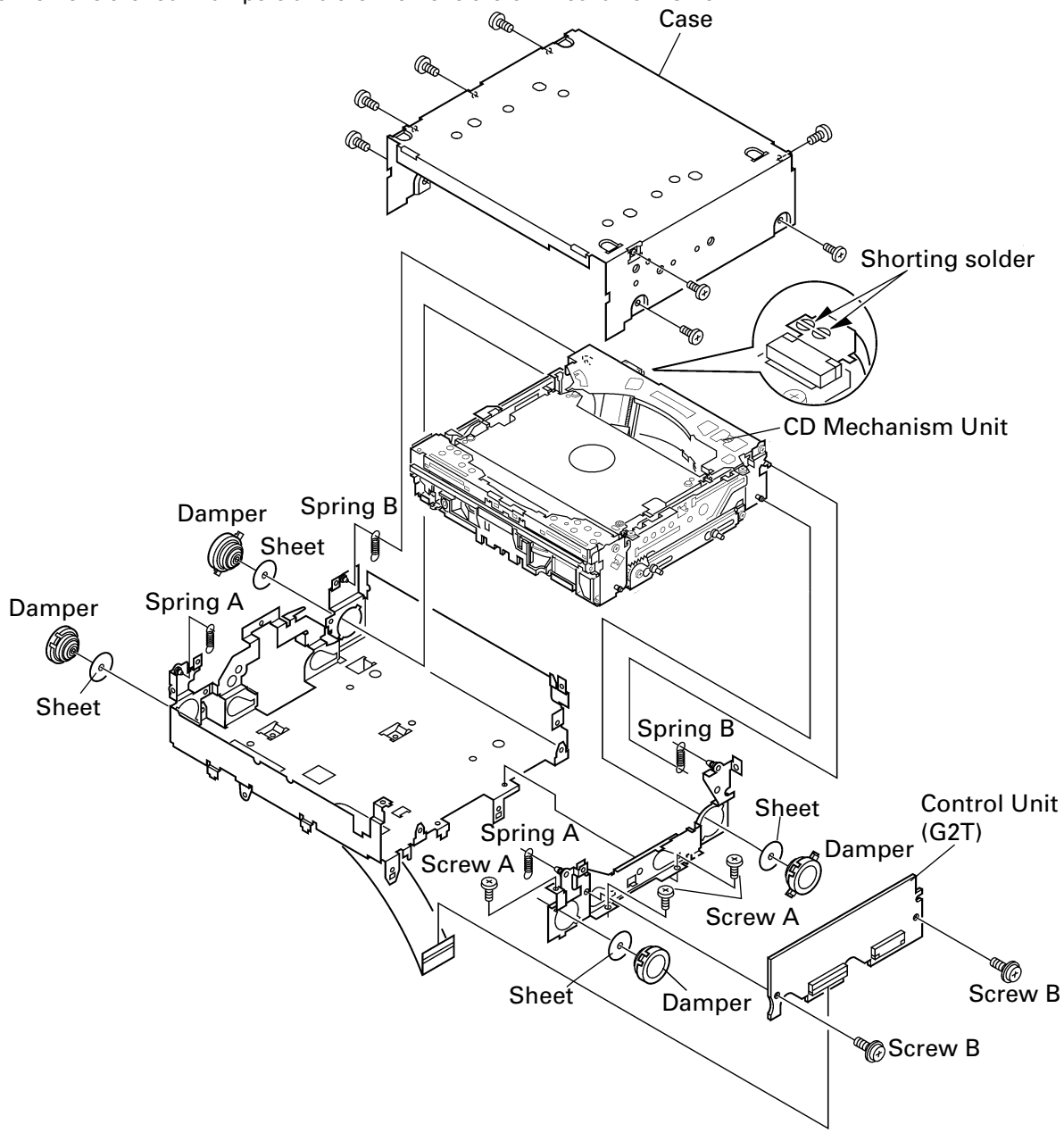

Fig.6

flashLAV
www.club-lexus.ru

● Cautions on replacing the CD mechanism unit

The CD mechanism units available as service parts have been set in the shipment mode at the factory. Before mounting it on the product to be serviced, be sure to apply the power to a CD mechanism to put it into the initial mode, where the carriage mech assy stays at the disc clamp position, in accordance with the following method:

<Initial mode setting method>

1. Keep a CD mechanism unit out of the product to be serviced as shown below. Connect the 50-pin connector of the control unit (G2T) in the product and the 50-pin connector of the PCB unit (Side) in the CD mechanism by using the extension cable (GGD1250).
2. Apply the power (+14V) to the product to move the CD mechanism until it enters the initial mode and stops. (Operating time: about 30 seconds)
3. When it is confirmed that the CD mechanism stops in the initial mode, the setting completes.

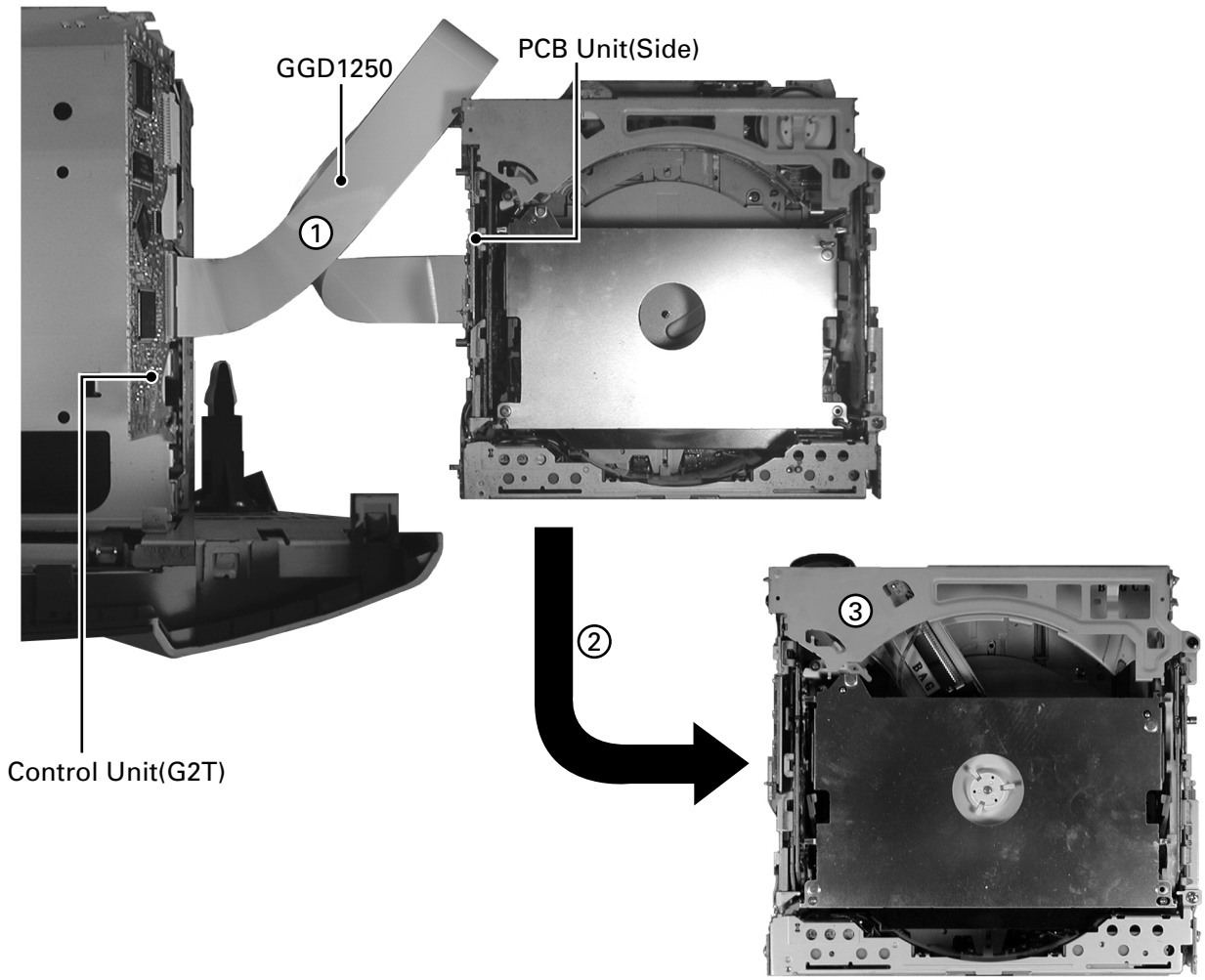

● Removing the PU Unit(PX1)

1. Set the mechanism to the shipment mode.
2. Remove the two screws A and two screws B.
3. Remove the Frame.

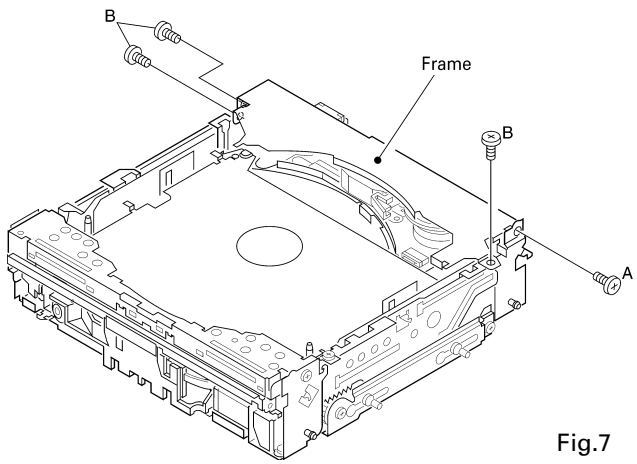

Fig.7

flashLAV
www.club-lexus.ru

4. Apply shorting solder to the PU flexible cable before disconnecting it from the connector CN12.
5. Disconnect the flexible cable from the connector CN12, and remove the flexible cable Holder.
6. Remove the washer and Arm. (Be careful not to lose the spring B.)
7. Remove the screw, spring A, and Collar.
8. Remove the Carriage Mech. Assy.

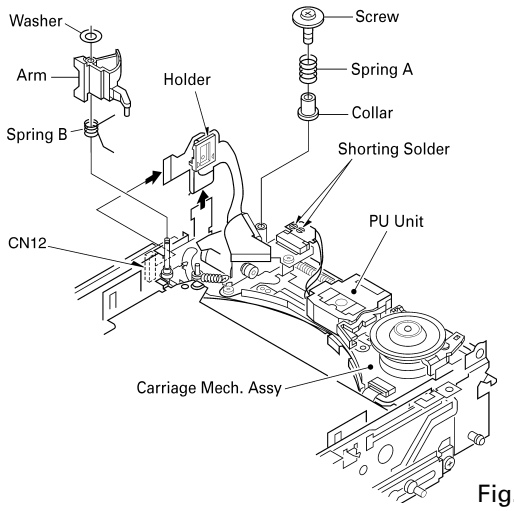

Fig.8

9. Apply shorting solder to the PU flexible cable before disconnecting it from the Connector.
10. Disconnect the PU flexible cable from the Connector.
11. Move the PU Unit to the left side slightly by turning the Gear.
12. Pull out the spindle motor Support Wheel Unit upwards to remove it.
13. Remove the Spring.
14. Slide the holder to make it easier to remove the Screw Unit.

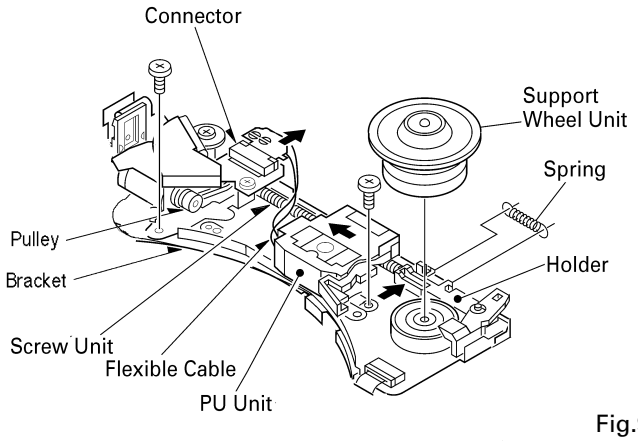

Fig.9

15. While pressing the shaft holder in the direction shown by the black arrow in the right figure, remove the PU Unit together with the Screw Unit.

Note:
To assemble the PU Unit, insert the Spring on the PU rear between the PU Unit and the Guide first.

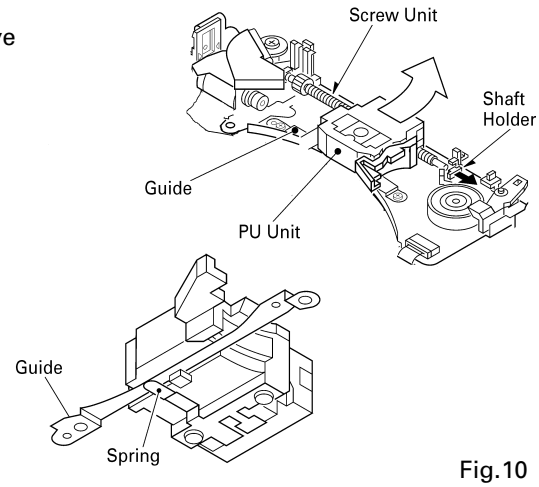

Fig.10

flashLAV
www.club-lexus.ru

7.1.2 PCB LOCATIONS

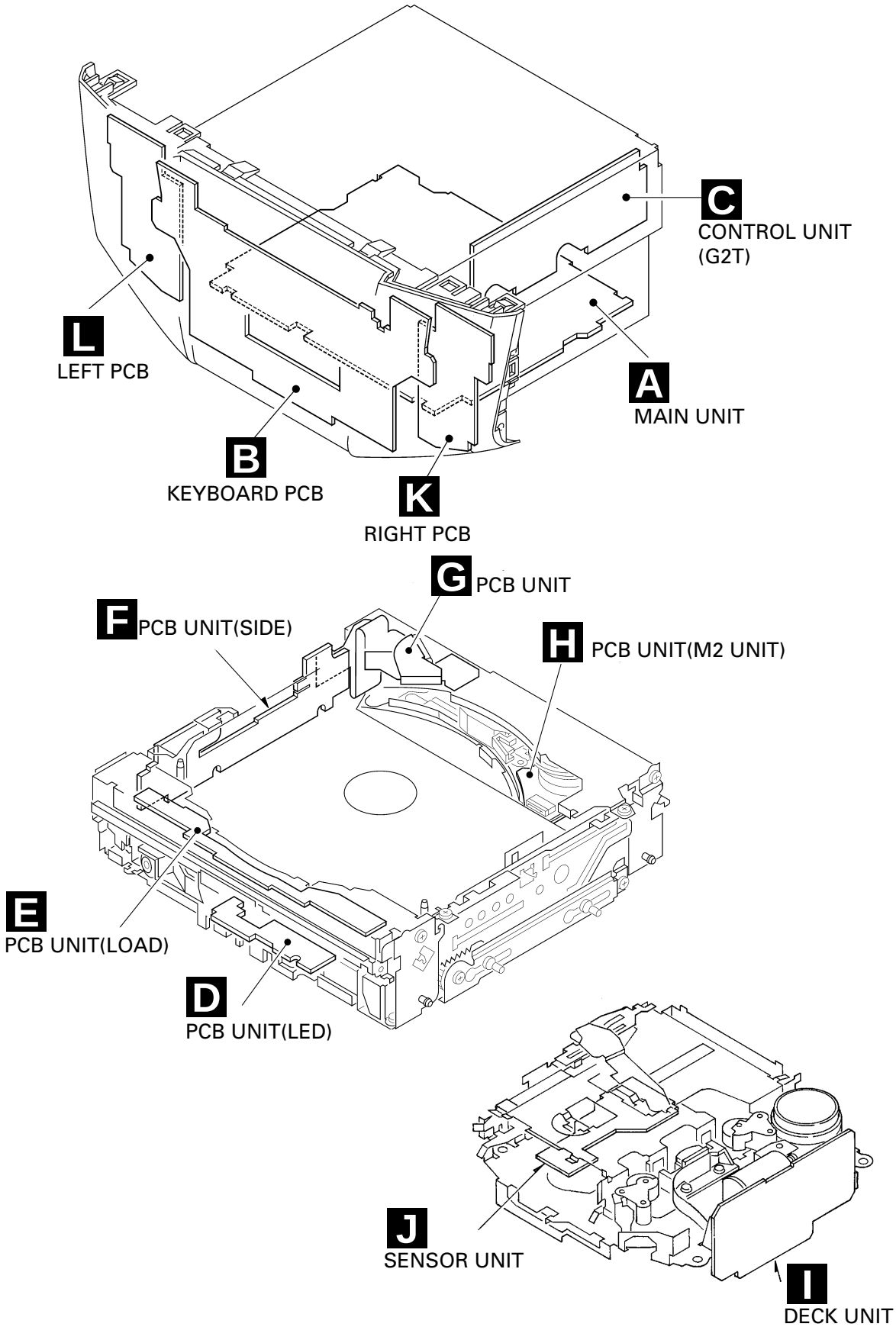

flashLAV
www.club-lexus.ru

7.1.3 CONNECTOR FUNCTION DESCRIPTION

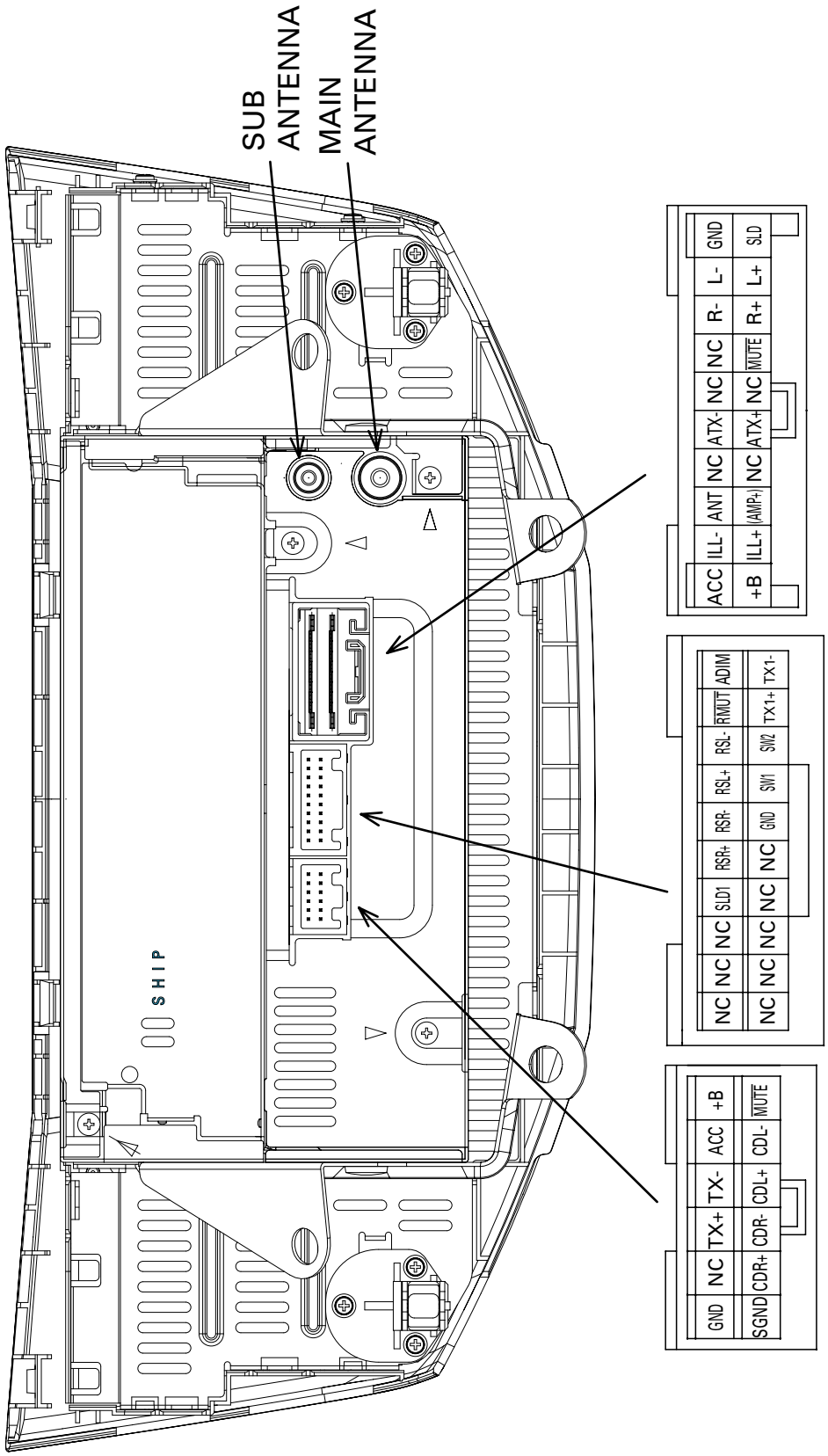

flashLAV
www.club-lexus.ru

7.2 PARTS

7.2.1 IC

● **Pin Functions (PD5788A)**

Pin No.	Pin Name	I/O	Function and Operation
1	FMSD	I	Tuner : FM SD input
2	ST	I	Tuner : FM stereo indicator input
3	NC		Not used
4	LAMP	O	Lamp power supply control output
5	LDO	O	LCD driver : Data output
6	LDI	I	LCD driver : Data input
7	LCK	O	LCD driver : Clock output
8	BYTE	I	Connect to ground
9	CNVSS	I	Ground
10	LOCL	O	Tuner : Local L output
11	PCE2	O	Tuner : E2PROM chip enable output
12	$\overline{\text{RESET}}$	I	Reset Input
13	XOUT	O	Crystal oscillating element connection terminal
14	VSS		GND
15	XIN	I	Crystal oscillating element connection terminal
16	VDD		Power supply terminal
17	$\overline{\text{NMI}}$	I	Connect to VDD
18	$\overline{\text{RCK}}$	I	RDS : Clock input
19	$\overline{\text{LDET}}$	I	Tuner : PLL lock sense input
20	$\overline{\text{CDEJ}}$	I	CD EJECT key sense input
21	RX2	I	IP-BUS : Data input
22	IPPW	O	IP-BUS : Driver power supply output
23	NC		Not used
24	NC		Not used
25	NC		Not used
26	NC		Not used
27	DRST	O	RDS : Decoder reset output
28	BLIGHT	O	Back Light ON/OFF output
29	RX1	I	IP-BUS : Data input
30	TX	O	IP-BUS : Data output
31	PDO	O	Tuner : PLL IC data output
32	PDI	I	Tuner : PLL IC data input
33	$\overline{\text{PCK}}$	O	Tuner : PLL IC clock output
34	PCE1	O	Tuner : PLL IC chip select output
35	BSO	O	P–BUS : Serial data output
36	BSI	I	P–BUS : Serial data input
37	BSCK	O	P-BUS : Serial clock output
38	$\overline{\text{BRXEN}}$	I/O	P-BUS : Reception enable input/output
39	$\overline{\text{BRST}}$	O	P-BUS : Reset output
40	$\overline{\text{BSRQ}}$	O	P-BUS : Service request output
41	FMPW	O	FM power supply control output
42	AMPW	O	AM power supply control output
43	SYSPWR	O	System power control output
44	RDT	I	RDS : Data input
45	SEL1b	O	Amp output select b output
46	SEL1a	O	Amp output select a output
47	INH1	O	Amp output inhibit output
48	SEL2b	O	RSE output select b output
49	SEL2a	O	RSE output select a output
50	INH2	O	RSE output inhibit output
51	RSEMUTE	O	RSE mute output
52	$\overline{\text{SYSMUTE2}}$	O	System mute output
53	$\overline{\text{SYSMUTE}}$	O	RSE system mute output
54	ANTA	O	Not used
55	SWVDD	O	Keyboard unit power supply control output
56	LANMUTE	I	AVC-LAN mute output
57	ADIM	I	ADIM information input

flashLAV
www.club-lexus.ru

Pin No.	Pin Name	I/O	Function and Operation
58	ROMDT	I/O	ROM correction data input/output
59	ROMCLK	O	ROM correction clock output
60	TEST	I	Test mode input
61	ROMCS	O	ROM correction chip select output
62	VCC		Power supply terminal
63	ANTB	O	Not used
64	VSS		Grand
65	ISEN	I	Illumination power supply sense input
66	MS	I	Cassette mechanism : Music search sense input
67	$\overline{FR}$	O	Cassette mechanism : Head forward/reverse select output
68	PLAY	O	Cassette mechanism : MS gain select output
69	$\overline{MTL}$	I	Cassette mechanism : 70μs equalizer select input
70	NR	O	Cassette mechanism : Dolby NR ON/OFF select output
71	CSLOAD	I	Cassette mechanism : Tape loading sense input
72	POS	I	Cassette mechanism : Position sense input
73	$\overline{ASENS}$	I	ACC power supply sense input
74	$\overline{CSEJ}$	I	Tape eject sense input
75	$\overline{BSENS}$	I	Back up power supply sense input
76	ES	I	Tape end sense input
77	SC2	O	Cassette mechanism : Sub motor control 2 output
78	SC1	O	Cassette mechanism : Sub motor control 1 output
79	CM	O	Cassette mechanism : Capstan motor control output
80	$\overline{STBY}$	O	Cassette mechanism : Driver stand-by output
81	$\overline{POWER}$	I	POWER key input
82	ENC1+	I	VOL encoder (+) input
83	ENC1-	I	VOL encoder (-) input
84	ENC2+	I	AUD encoder (+) input
85	ENC2-	I	AUD encoder (-) input
86	LCE1	O	LCD driver 1 chip enable output
87	NC		Not used
88	$\overline{LRST}$	O	CD illumination output
89	NC		Not used
90	$\overline{RDSLK}$	I	RDS : LK signal input
91	NC		Not used
92	NC		Not used
93	SL	I	Tuner : Signal level input
94	ILL-	I	Rheostat signal input
95	STSW2	I	Steering switch 1 input
96	AVSS		A/D converter ground terminal
97	STSW1	I	Steering switch 1 input
98	VREF		A/D converter reference voltage terminal
99	AVCC		A/D converter power supply terminal
100	NC		Not used

* PD5788A(FX-MG8227ZT/UC)

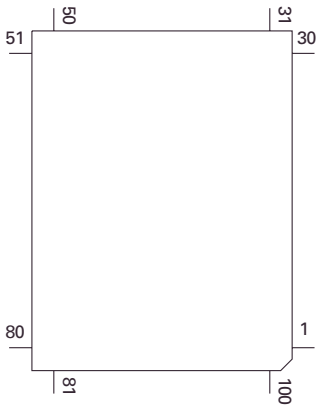

IC's marked by * are MOS type.
Be careful in handling them because they are very liable to be damaged by electrostatic induction.

* S-812C56AUA-C3K

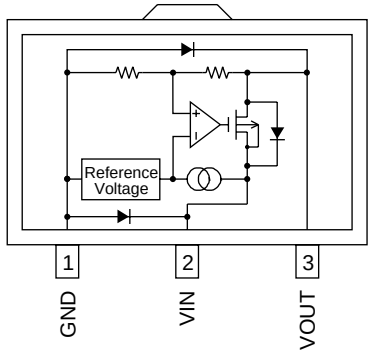

* S-80835CNUA-B8U

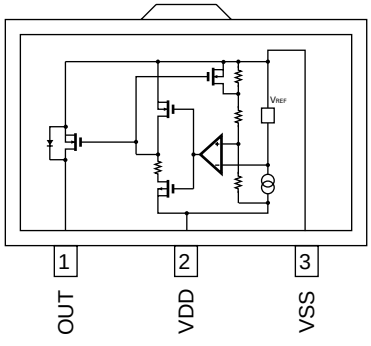

flashLAV
www.club-lexus.ru

● Pin Functions (SM5903BFP)

Pin No.	Pin Name	I/O	Function and Operation
1	VDD2		Power supply terminal
2-6	UC1-UC5	I/O	Micro computer interface : Extension input / output
7	NC		Not used
8	NTEST	I	Test input
9	CLK	I	Clock input (16.9344MHz)
10	VSS		Ground terminal
11	YSRDATA	I	Audio : Serial data input
12	YLRCK	I	Audio : Serial LR clock input
13	YSCK	I	Audio : Serial bit clock input
14	ZSCK	O	Audio : Serial bit clock output
15	ZLRCK	O	Audio : Serial LR clock output
16	ZSRDATA	O	Audio : Serial data output
17	YFLAG	I	RAM over flow flag input from signal processing IC
18	YFCLK	I	Frame clock input
19	YBLKCK	I	Sub code block clock input
20	NRESET	I	System reset input
21	ZSENSE	O	Micro computer interface : Status output
22	VDD1		Power supply terminal
23	YDMUTE	I	Mute input
24	YMLD	I	Micro computer interface : Latch clock input
25	YMDATA	I	Micro computer interface : Serial data input
26	YMCLK	I	Micro computer interface : Shift clock input
27	A10	O	D-RAM : Address output
28	NCAS	O	D-RAM : $\overline{CAS}$ control output
29,30	D2,D3	I/O	D-RAM : Data input / output
31,32	D0,D1	I/O	D-RAM : Data input / output
33	NWE	O	D-RAM : $\overline{WE}$ control output
34	NRAS	O	D-RAM : $\overline{RAS}$ control output
35-40	A9-A4	O	D-RAM : Address output
41-44	A0-A3	O	D-RAM : Address output

SM5903BFP

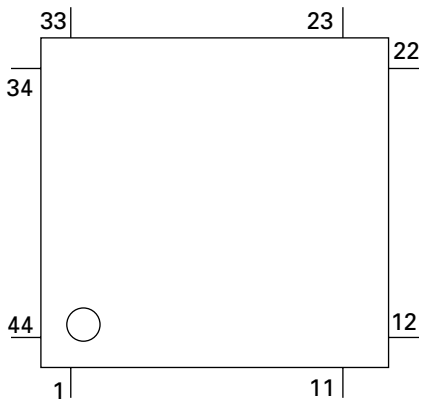

S-818A33AUC-BGN

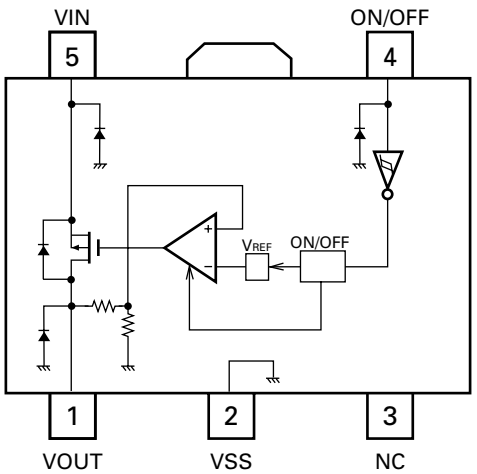

flashLAV
www.club-lexus.ru

● Pin Functions (PD5748E)

Pin No.	Pin Name	I/O	Function and Operation
1	STSMO	O	STS test output
2	SPDLFG	I	Spindle FG pulse input
3	TXTSO	O	TEXT control parameter serial output
4	TXTSI	I	TEXT data serial input
5	TXTSCK	O	TEXT clock output
6	BYTE	I	VCC connected
7	CNVSS	I	VSS connected
8	POWER	O	CD : +5V control output
9	CONT	O	CD : Servo driver control output
10	$\overline{\text{RESET}}$	I	Reset input
11	XOUT	O	Crystal oscillating element connection pin
12	VSS1		GND
13	XIN	I	Crystal oscillating element connection pin
14	VCC		Back up 5V
15	$\overline{\text{NMI}}$	I	Pull up
16	NC		Not used
17	BRST	I	P–BUS reset input
18	TXTPACK	I	TEXT PACK interrupt input
19,20	NC	O	Not used
21	CAMOK	I	Cam operation sense 1 input
22	CAMLOAD	I	Cam operation sense 2 input
23	CAMCLMP	I	Cam operation sense 3 input
24	$\overline{\text{TESTIN}}$	I	Test program start input
25	LOCK	I	CD : LSI spindle lock sense input
26	TXTSTB	O	TEXT parameter output
27	BRXEN	I/O	P-BUS : Reception enable input/output
28	BSRQ	O	P-BUS : Serial pole request output
29	BSO	O	P–BUS : Serial data output
30	BSI	I	P–BUS : Serial data input
31	BSCK	O	P–BUS : Clock output
32	NC	O	Not used
33	XSO	O	CD : LSI data output
34	XSI	I	CD : LSI data input
35	XSCK	O	CD : LSI clock output
36	VDCONT	O	VD control output
37	LCCONT	O	LCD drive voltage select output
38–44	NC	O	Not used
45	STSSL	O	STS IC latch output
46	NC	O	Not used
47	XAO	O	CD : LSI data discernment control signal output
48	$\overline{\text{XSTB}}$	O	CD : LSI strobe output
49	$\overline{\text{XRST}}$	O	CD : LSI reset output
50	$\overline{\text{CCS}}$	O	Compression IC chip enable output
51	$\overline{\text{EPCS}}$	I/O	EEPROM detect input , Chip select output
52	FOK	I	CD : LSI focus OK signal input
53	ELVCONT	O	ELV drive voltage select output
54–58	NC	O	Not used
59	STSWAQV	O	STS test output
60	VCC		Power supply
61	STSDEC	O	STS test output
62	VSS2		GND
63	STSENC	O	STS test output
64	STSSTD	O	STS test output
65	STSSTC	O	STS test output
66	STSSTB	O	STS test output
67	STSSTA	O	STS test output
68–71	NC	O	Not used

flashLAV
www.club-lexus.ru

Pin No.	Pin Name	I/O	Function and Operation
72	HOME2	I	Disc clamp claw sense input
73	SBSY	I	Sub code synchronous interrupt signal input
74	CDMUTE	O	CD : Mute output
75	LO2	O	LOAD motor control 2 output
76	LO1	O	LOAD motor control 1 output
77	ELV2	O	ELV Motor control 2 output
78	ELV1	O	ELV Motor control 1 output
79	HOME	I	Carriage home switch input
80	STS16M	I	STS DRAM 4M/16M(H) select input
81	LOADSW1	I	LOAD operation sense 1 input
82	LOADSW2	I	LOAD operation sense 2 input
83,84	NC		Not used
85	$\overline{\text{ADENA}}$	O	AVREF enable output
86	CG1	O	Cam motor 1 output
87	CG2	O	Cam motor 2 output
88	LOADVOL2	I	LOAD voltage sense 2 input
89	LOADPHT	I	LOAD operation photo sense input
90	LOMMON	O	Not used
91	ELVSENS	I	ELV position select input
92	EREFF		ELV sense reference voltage
93	TEMP	I	CD : Temperature sense input
94	AVSS		A/D converter ground potential
95	VDIN	I	CD : Power supply short sensor input
96	VREF	I	A/D converter reference voltage input
97	AVCC		A/D converter ground
98	STSSI	I	STS IC data input
99	STSSO	O	STS IC data output
100	STSSCK	O	STS IC clock output

* PD5748E

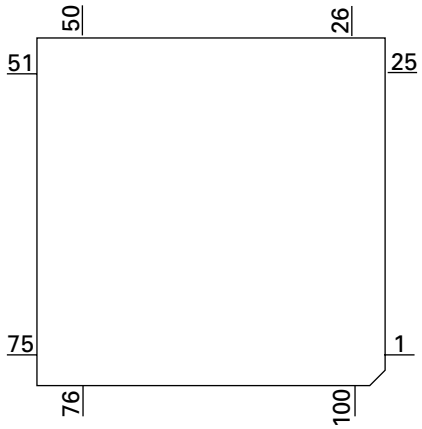

flashLAV
www.club-lexus.ru

BA6849FS

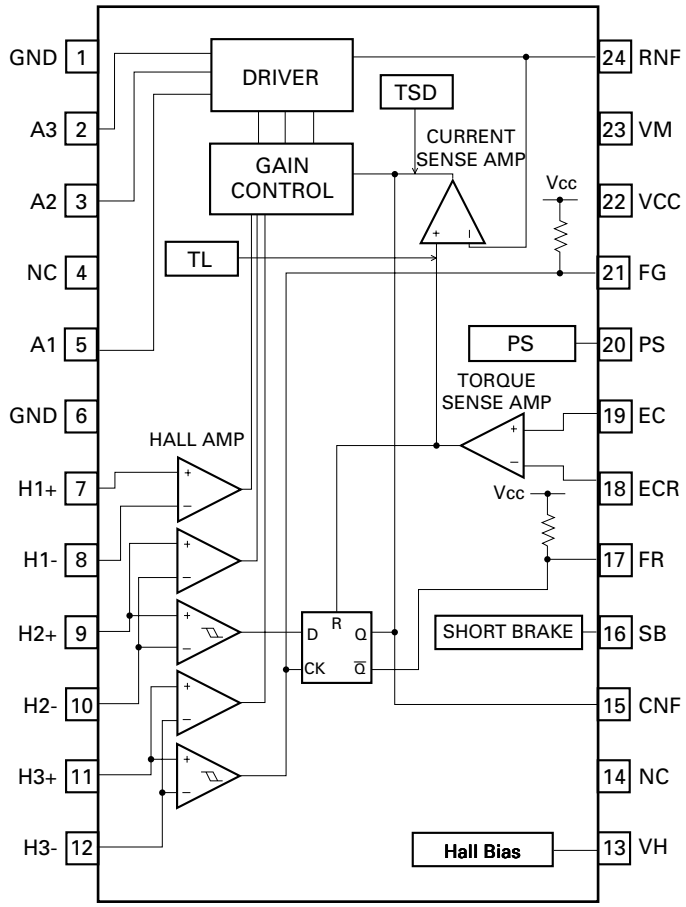

* MSM51V17400F6TFT

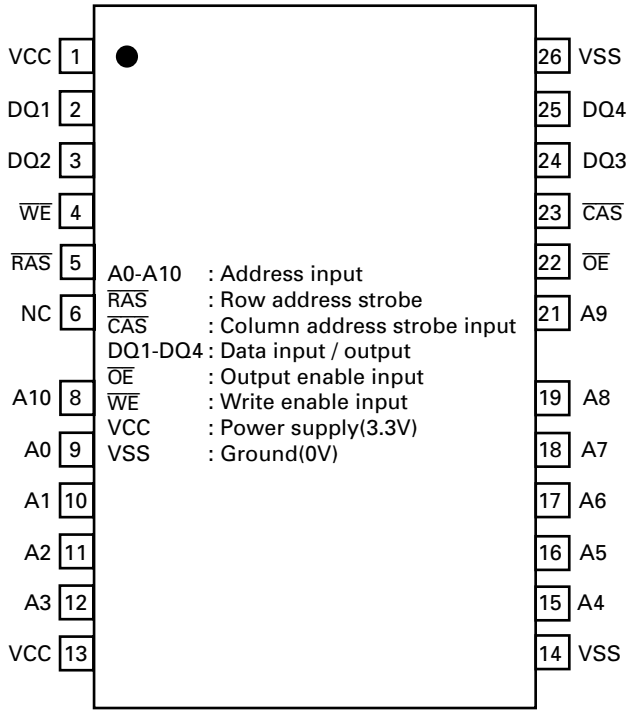

BD7962FM

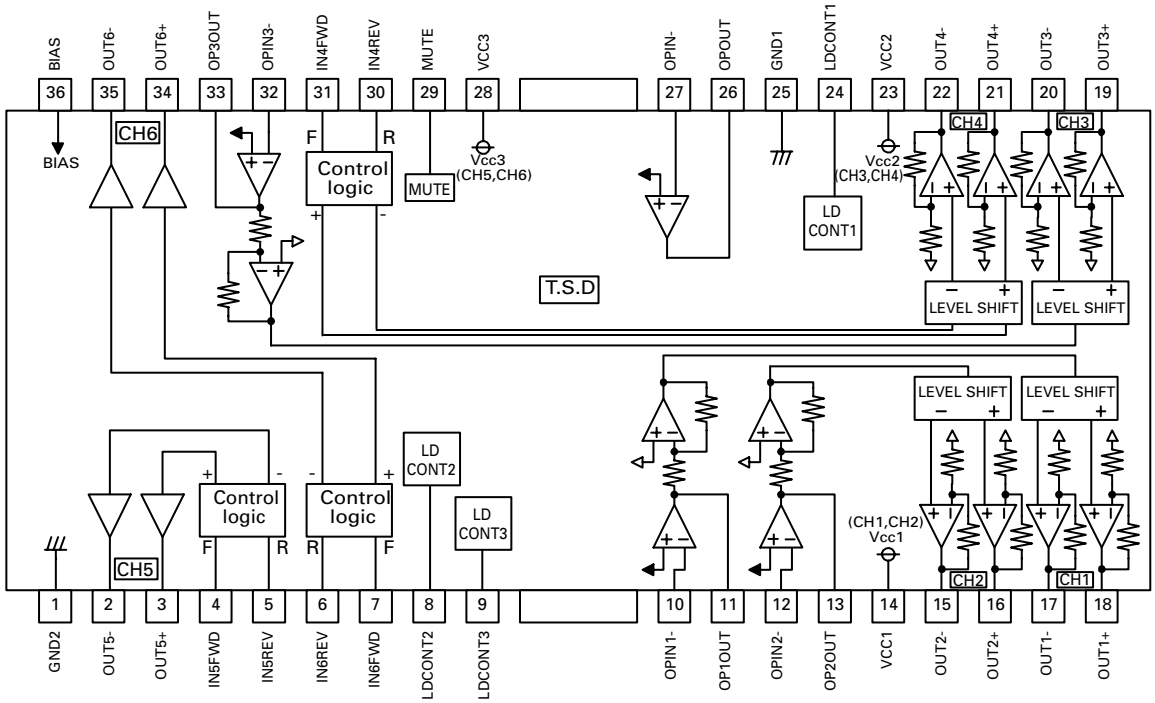

flashLAV
www.club-lexus.ru

● FM/AM Tuner Unit

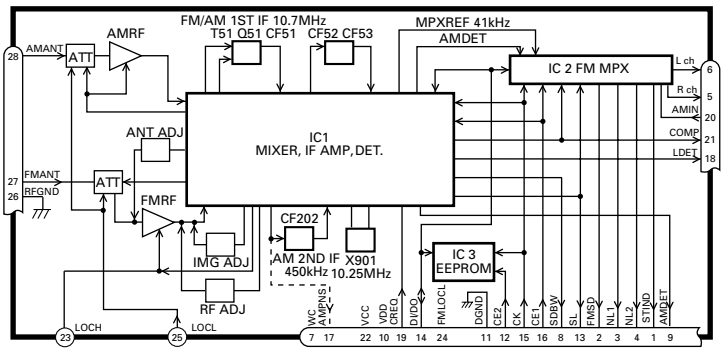

No.	Symbol	I/O	Explain	
1	STIND	O	stereo indicator	"Low" when the FM stereo signals are received. To be pulled up to the "VDD" at 47kΩ.
2	FMSD	O	FM station detector	"High" when signals are received. To be pulled up to the "VDD" at 47kΩ Meanwhile, 10kΩ should be used when taking diver FIX trigger from here and "High: 0.9VDD or more" and "Low: 250mV or less". (Should satisfy the diver IC specifications)
3	NL1	O	noise level-1	"High" when noise is received. Output for the RDS. GND at 47kΩ//1,800pF.
4	NL2	O	noise level-2	"High" when noise is received. Output for the RDS. GND at 36kΩ//330pF.
5	Rch	O	R channel output	FM stereo "R-ch" signal output or AM audio output. Add the specified de-emphasis constant.
6	Lch	O	L channel output	FM stereo "L-ch" signal output or AM audio output. Add the specified de-emphasis constant.
7	WC		write control	EEPROM write control. Writing permissible at "Low". Normally open.
8	SDBW	O	SD bandwidth	SD bandwidth signal output. For detection of detuning data for the RDS.
9	AMDET	O	AM detector output	AM detector output. r out < 100Ω
10	VDD		power supply	Power supply pin for the digital section. DC 5V +/- 0.25V. Be careful about overlapping noise in the logic section.
11	DGND		digital ground	Grounding for the digital section.
12	CE2	I	chip enable-2	EEPROM chip enable. Active a "Low" To be pulled up to the "VDD" at 47kΩ
13	SL	I/O	signal level	Received FM/AM signal level (strength) output. Connect the specified load resistor and capacitor (10k Ω+ 39k Ω//4,700pF)
14	DI/DO	I/O	data input/ data output	Data input/Data output To be pulled up to the "VDD" at 47kΩ
15	CK	I	clock	Clock input To be pulled up to the "VDD" at 47kΩ
16	CE1	I	chip enable-1	AF·RF chip enable. Active at "High"To be grounded at 47kΩ
17	AMPNS	O	AM PNS IF signal	IF signal output for AM PNS circuit.
18	LDET	O	lock detector	Active at "Low". To be pulled up to the "VDD" at 47kΩ
19	CREQ	I	current request	Active at "Low". To be grounded at 47kΩ
20	AMINI		AM audio input	The frequency response and the level are set by connecting an external CR network with terminal AMIN as terminal AMDET. r in = 50kΩ
21	COMP	O	composite signal	FM composite signal output. r out < 100Ω
22	VCC		power supply	Analog section power supply pin.DC 8.4V +/- 0.3V
23	LOCH	I	local high	FM local high pin. When seeking local high, apply 5V together with "LOCL".
24	FMLOCL	I	FM local low	FM local low pin. When seeking local low, apply 5V to the base of the NPN transistor with which the specified resistor is being connected to the emitter. Keep it open in case of ordinary marketed models.
25	LOCL	I	local low	FM/AM local low pin. When seeking local low, apply 5V to the base of the NPN transistor.Since this pin is exclusive for AM when the FMLOCL is in use, do not drive it under FM.
26	RFGND		RF ground	Grounding for the antenna section.
27	FMANT	I	FM antenna input	FM antenna input. 75Ω. Surge absorber (DSP-201M-S00B) is necessary.
28	AMANT	I	AM antenna input	AM antenna input. High impedance. Connect to the antenna through an L (LAU type) of 4.7μH.To cope with the power transmission line hums, insert a series circuit consisting of an L (a coil of about 100mH) + R (a resistor of 470 Ω to 2.2kΩ) between the GND.

flashLAV
www.club-lexus.ru

7.2.2 DISPLAY

● **LCD(CAW1722)**

SEGMENT

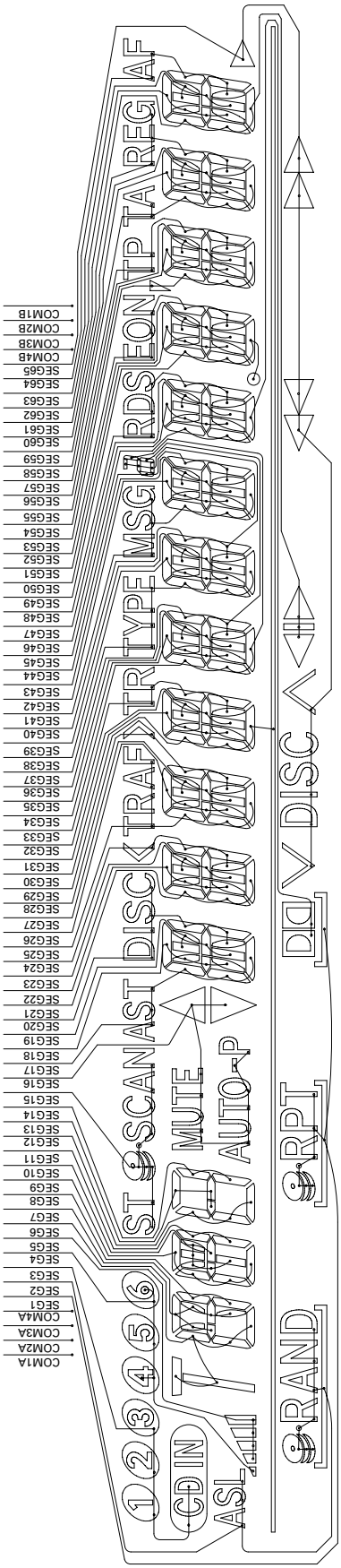

COMMON

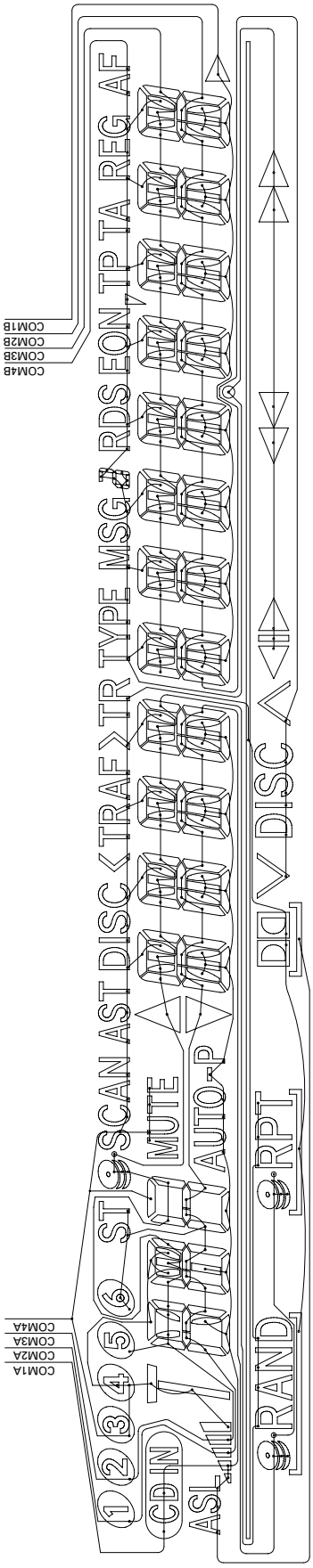

flashLAV
www.club-lexus.ru

7.3 EXPLANATION

7.3.1 SYSTEM BLOCK DIAGRAM

● **System 1**

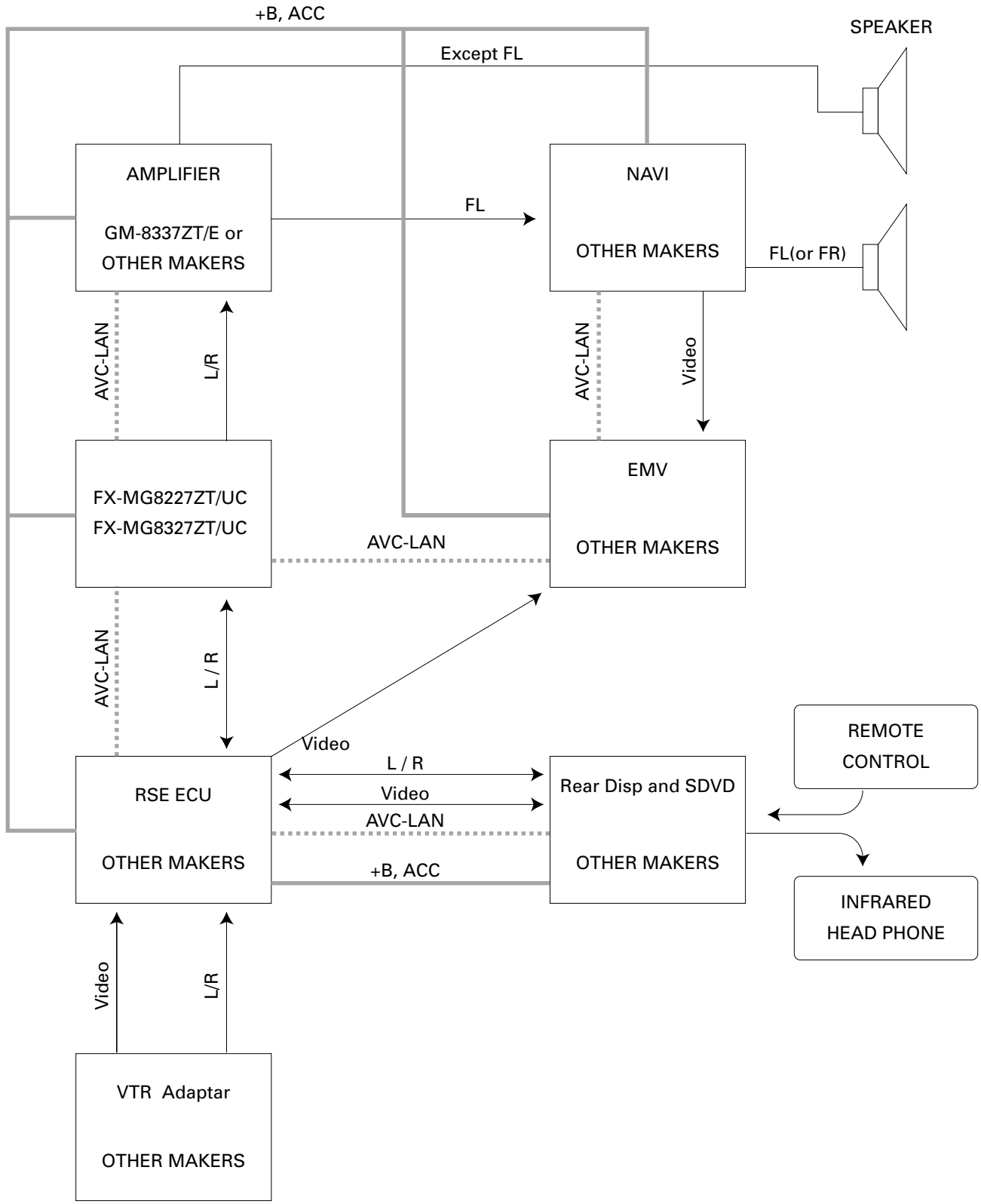

flashLAV
www.club-lexus.ru

● System 2

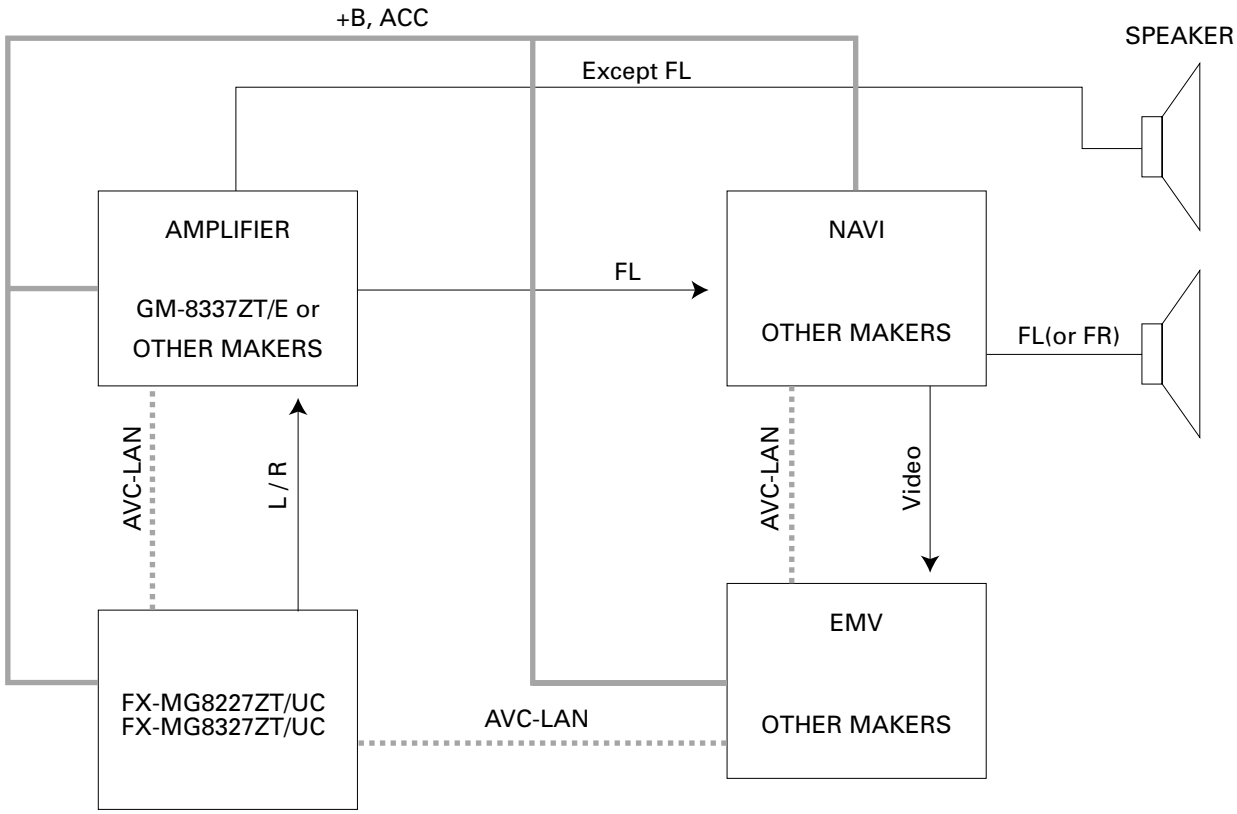

● System 3

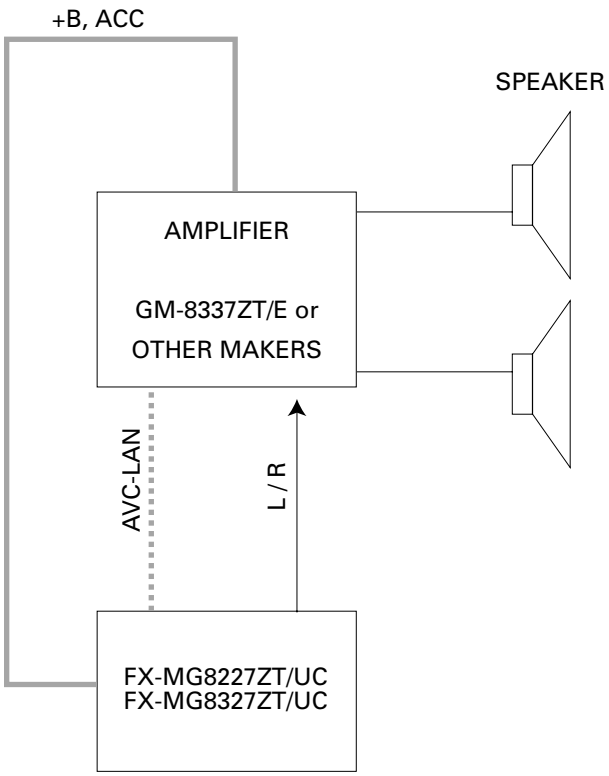

flashLAV
www.club-lexus.ru

● System 4

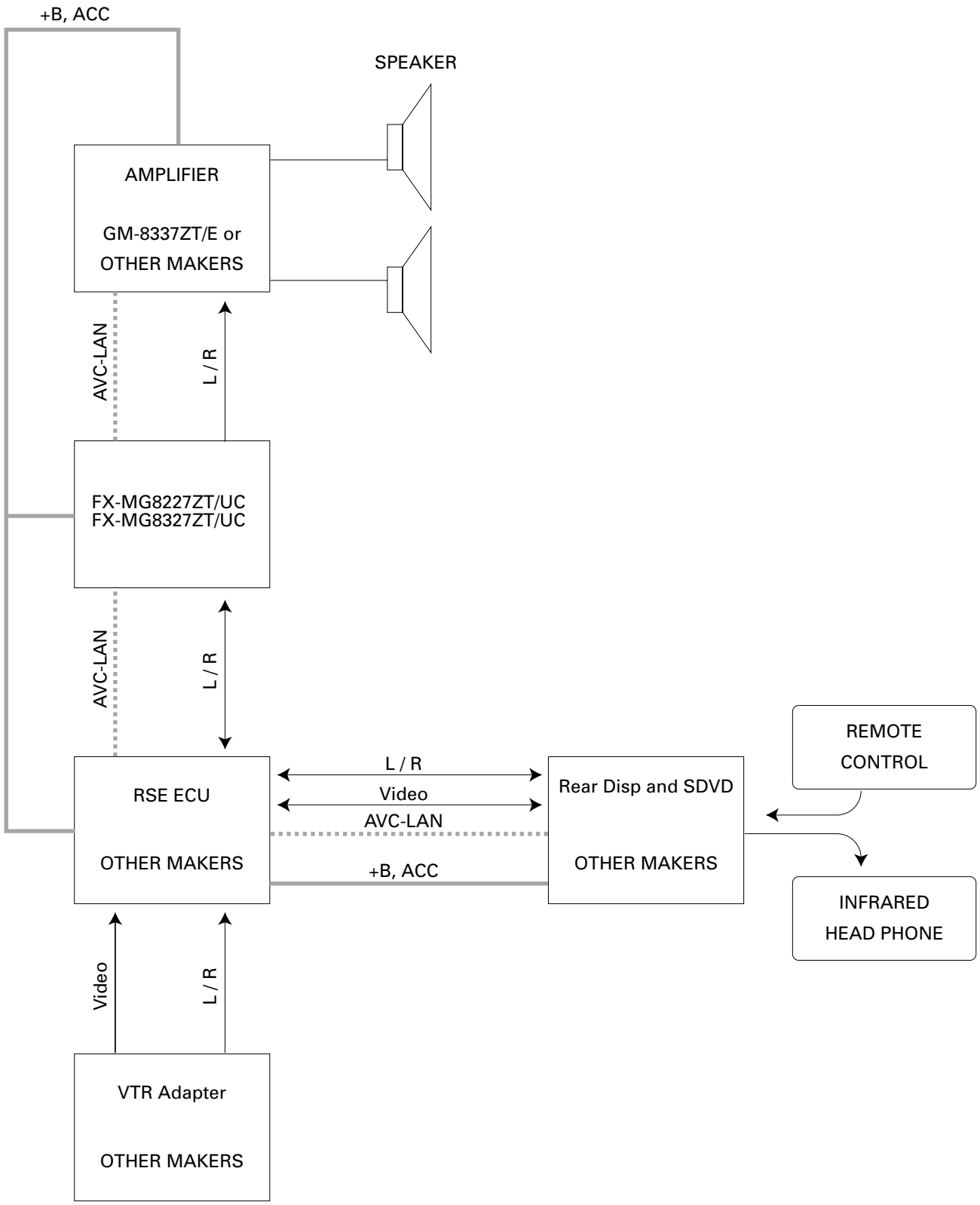

flashLAV
www.club-lexus.ru

7.3.2 OPERATIONAL FLOW CHART

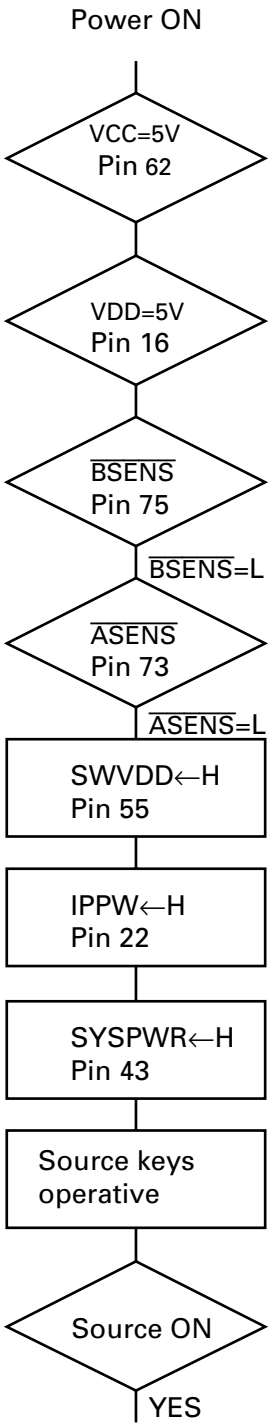

Completes power-on operation.
(After that, proceed to each source operation)

flashLAV
www.club-lexus.ru

7.4 NOTES ON SERVICING

7.4.1 CLEANING

Before shipping out the product, be sure to clean the following portions by using the prescribed cleaning tools:

Portions to be cleaned	Cleaning tools
CD pickup lenses	Cleaning liquid : GEM1004 Cleaning paper : GED-008

Portions to be cleaned	Cleaning tools
Cassette heads Pinch rollers Capstans	Cleaning paper : GED-008

7.4.2 FACTORY SETTINGS

● When the Repair is Complete

When the Repair is Complete, make the CD mechanism ready for transportation.

Turning on "Shipment mode"
(to prevent damage during shipment)

- Remove all discs loaded in this product, before disconnecting the power supply connector .

⇩

- Set this product to the "Shipment mode" and then disconnect the power supply connector before shipping.

⇩

- Setting the "Shipment mode"
  - Switch ACC OFF, and then, while simultaneously pressing the "SEEK UP" (or "TUNE UP") and "DISC"buttons, switch ACC ON.

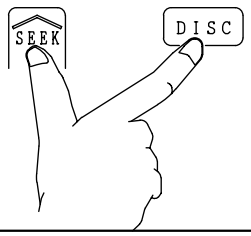

- Confirming "Shipment mode" setting
  - During Shipment mode setting the CD loading door indicator flashes. when shipment mode setting is completed, it stays lit. (If the radio unit itself has a display, "SHIP" is indicated.)
  - After disconnecting the power supply connector and removing this product, confirm that you can see a metal plate through the hole near the "SHIP" mark on the rear chassis.
  - Confirm that the door of the CD player is closed.

flashLAV
www.club-lexus.ru

8. OPERATIONS

● **FX-MG8227ZT/UC**

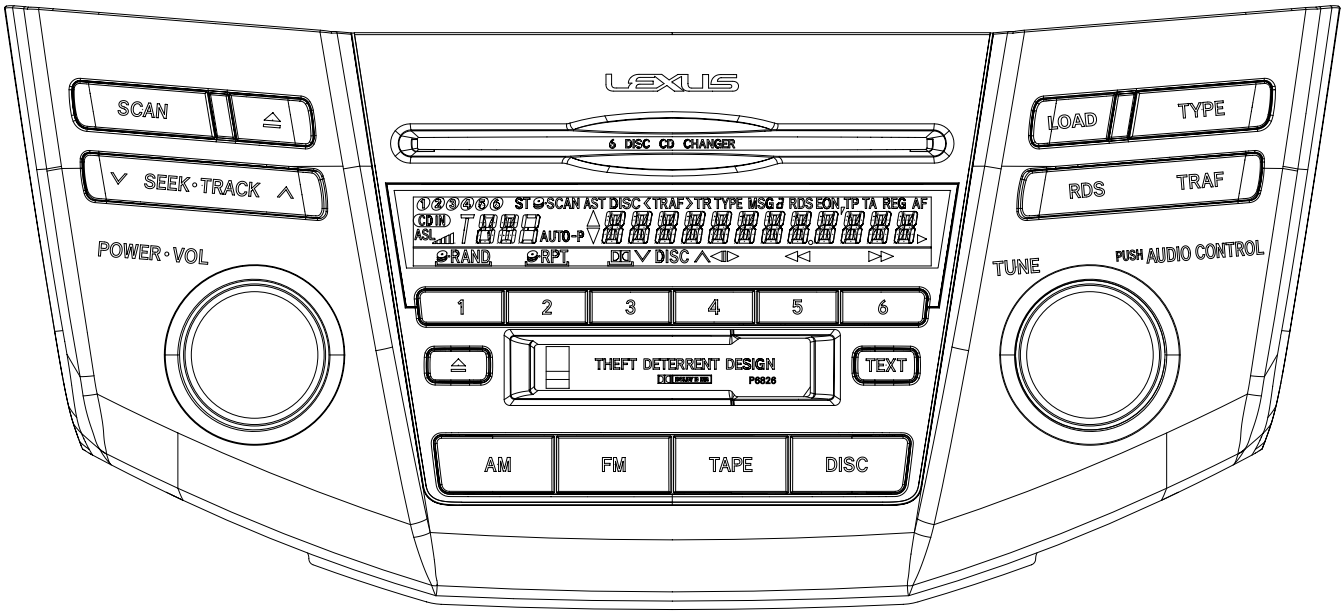

● **FX-MG8327ZT/UC**

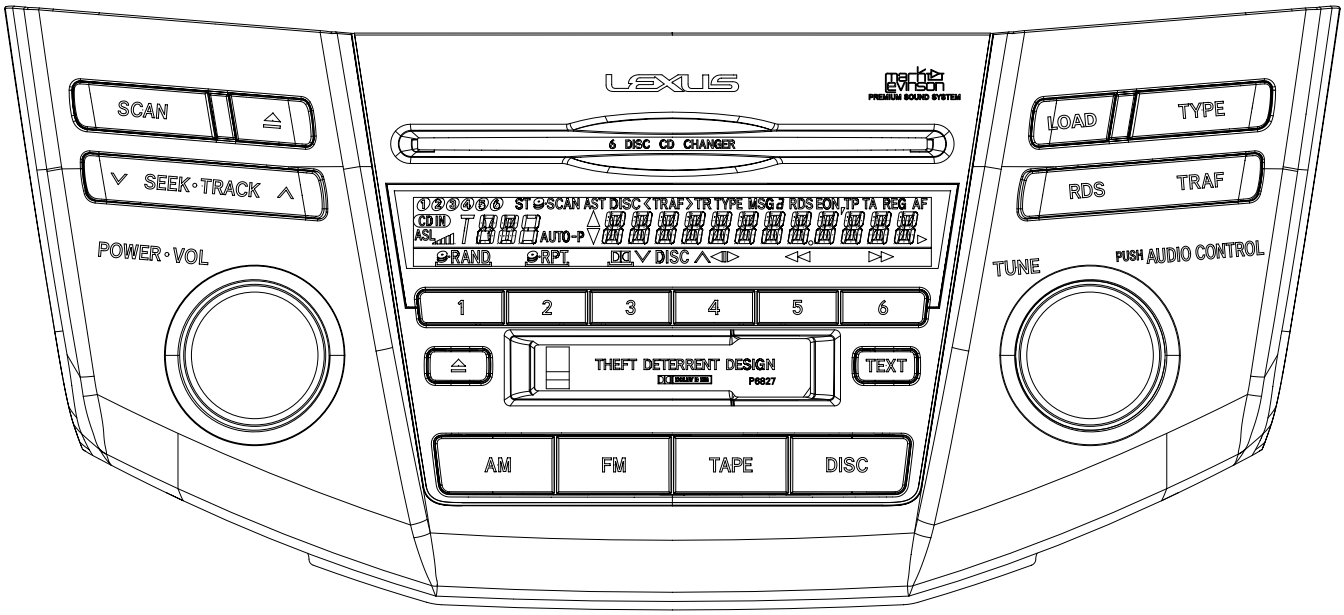

flashLAV
www.club-lexus.ru

● RADIO

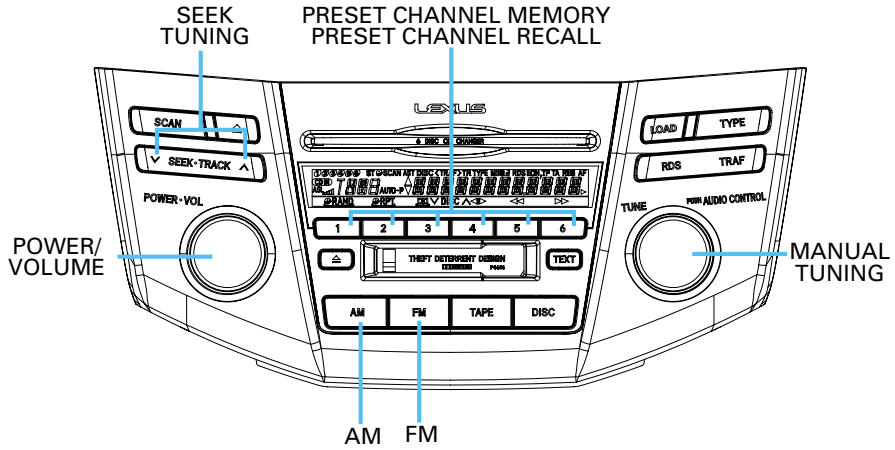

● CD

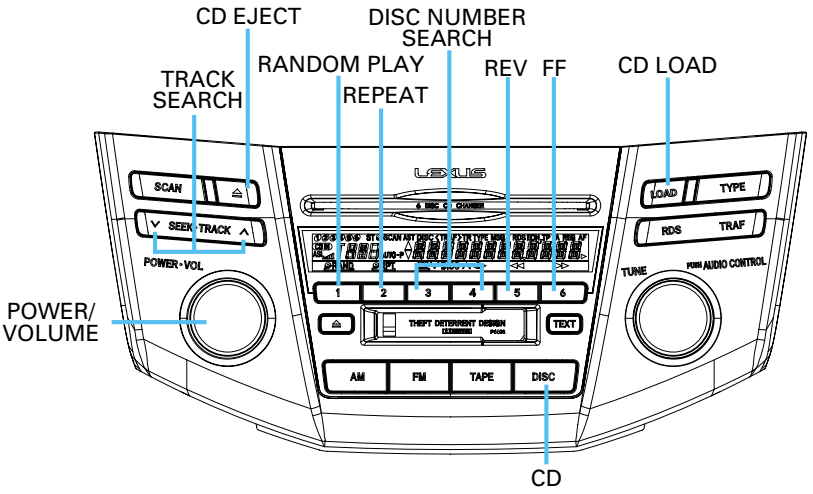

● CASSETTE

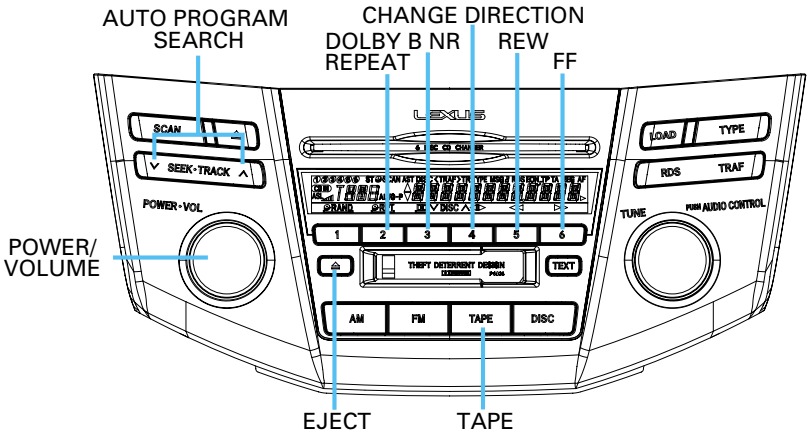

PIONEER CORPORATION 4-1, Meguro 1-Chome, Meguro-ku, Tokyo 153-8654, Japan
PIONEER ELECTRONICS (USA) INC. P.O.Box 1760, Long Beach, CA 90801-1760 U.S.A.
PIONEER EUROPE NV Haven 1087 Keetberglaan 1, 9120 Melsele, Belgium
PIONEER ELECTRONICS ASIACENTRE PTE.LTD. 253 Alexandra Road, #04-01, Singapore 159936

© PIONEER CORPORATION 2003

K-ZZD. JAN. 2003 Printed in Japan

flashLAV
www.club-lexus.ru