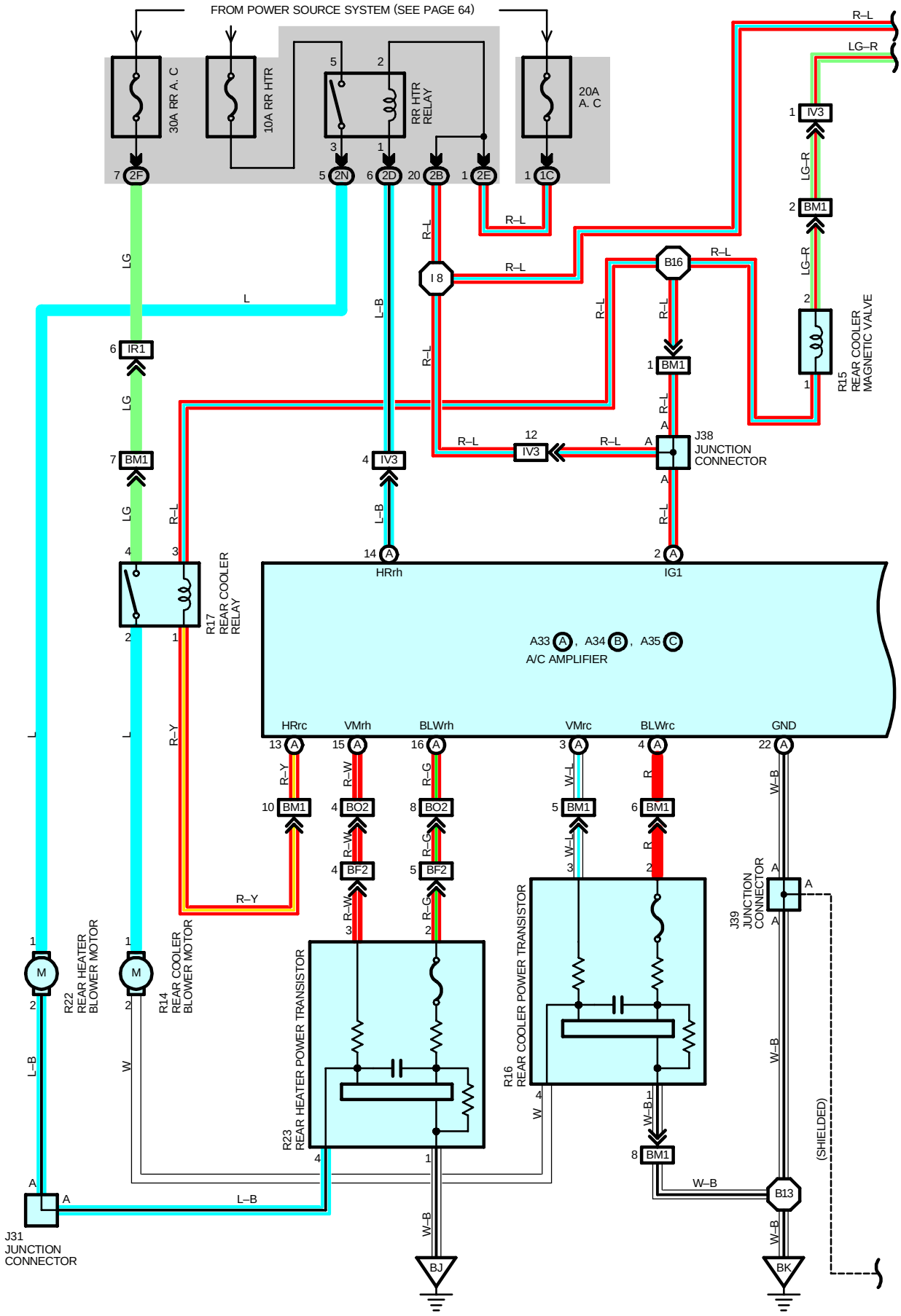
FROM POWER SOURCE SYSTEM (SEE PAGE 64)
30A RR A. C
10A RR HTR
RR HTR RELAY
20A A. C
2F
2N
2D
2B
2E
1C
IV3
BM1
B16
I 8
IR1
R15 REAR COOLER MAGNETIC VALVE
J38 JUNCTION CONNECTOR
R17 REAR COOLER RELAY
HRrh
IG1
A33, A34, A35
A/C AMPLIFIER
HRrc
VMrh
BLWrh
VMrc
BLWrc
GND
BO2
BF2
R22 REAR HEATER BLOWER MOTOR
R14 REAR COOLER BLOWER MOTOR
R23 REAR HEATER POWER TRANSISTOR
R16 REAR COOLER POWER TRANSISTOR
J39 JUNCTION CONNECTOR
J31 JUNCTION CONNECTOR
B13
BJ
BK
(SHIELDED)

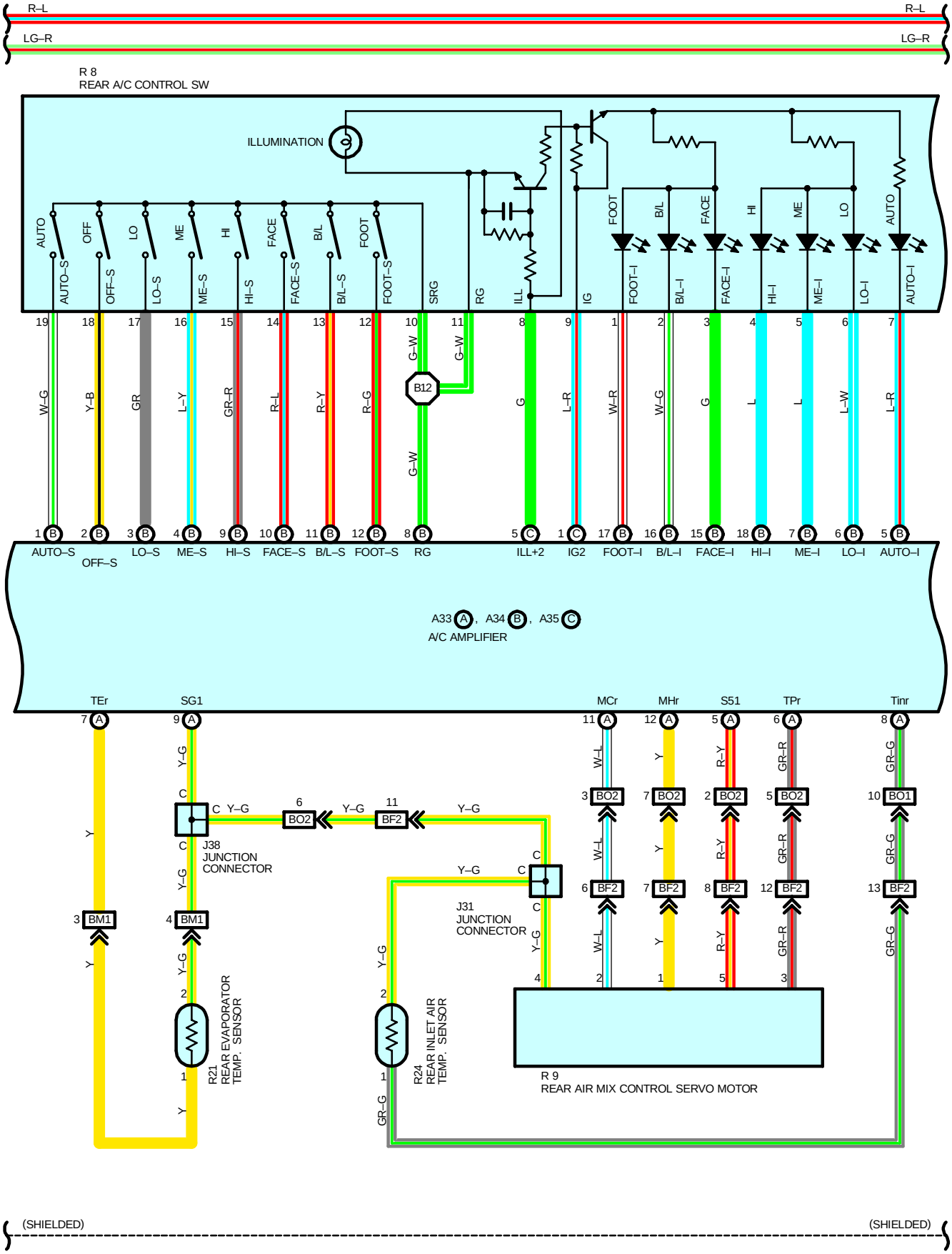
R–L
LG–R
R 8
REAR A/C CONTROL SW
ILLUMINATION
AUTO
OFF
LO
ME
HI
FACE
B/L
FOOT
AUTO–S
OFF–S
LO–S
ME–S
HI–S
FACE–S
B/L–S
FOOT–S
SRG
RG
ILL
IG
FOOT–I
B/L–I
FACE–I
HI–I
ME–I
LO–I
AUTO–I
W–G
Y–B
GR
L–Y
GR–R
R–L
R–Y
R–G
G–W
B12
G
L–R
W–R
L
L–W
AUTO–S
OFF–S
LO–S
ME–S
HI–S
FACE–S
B/L–S
FOOT–S
RG
ILL+2
IG2
FOOT–I
B/L–I
FACE–I
HI–I
ME–I
LO–I
AUTO–I
A33 A, A34 B, A35 C
A/C AMPLIFIER
TEr
SG1
MCr
MHr
S51
TPr
Tinr
Y
Y–G
C
J38
JUNCTION
CONNECTOR
BO2
BF2
BM1
BO1
J31
JUNCTION
CONNECTOR
W–L
R–Y
GR–R
GR–G
R21
REAR EVAPORATOR
TEMP. SENSOR
R24
REAR INLET AIR
TEMP. SENSOR
R 9
REAR AIR MIX CONTROL SERVO MOTOR
(SHIELDED)
(SHIELDED)

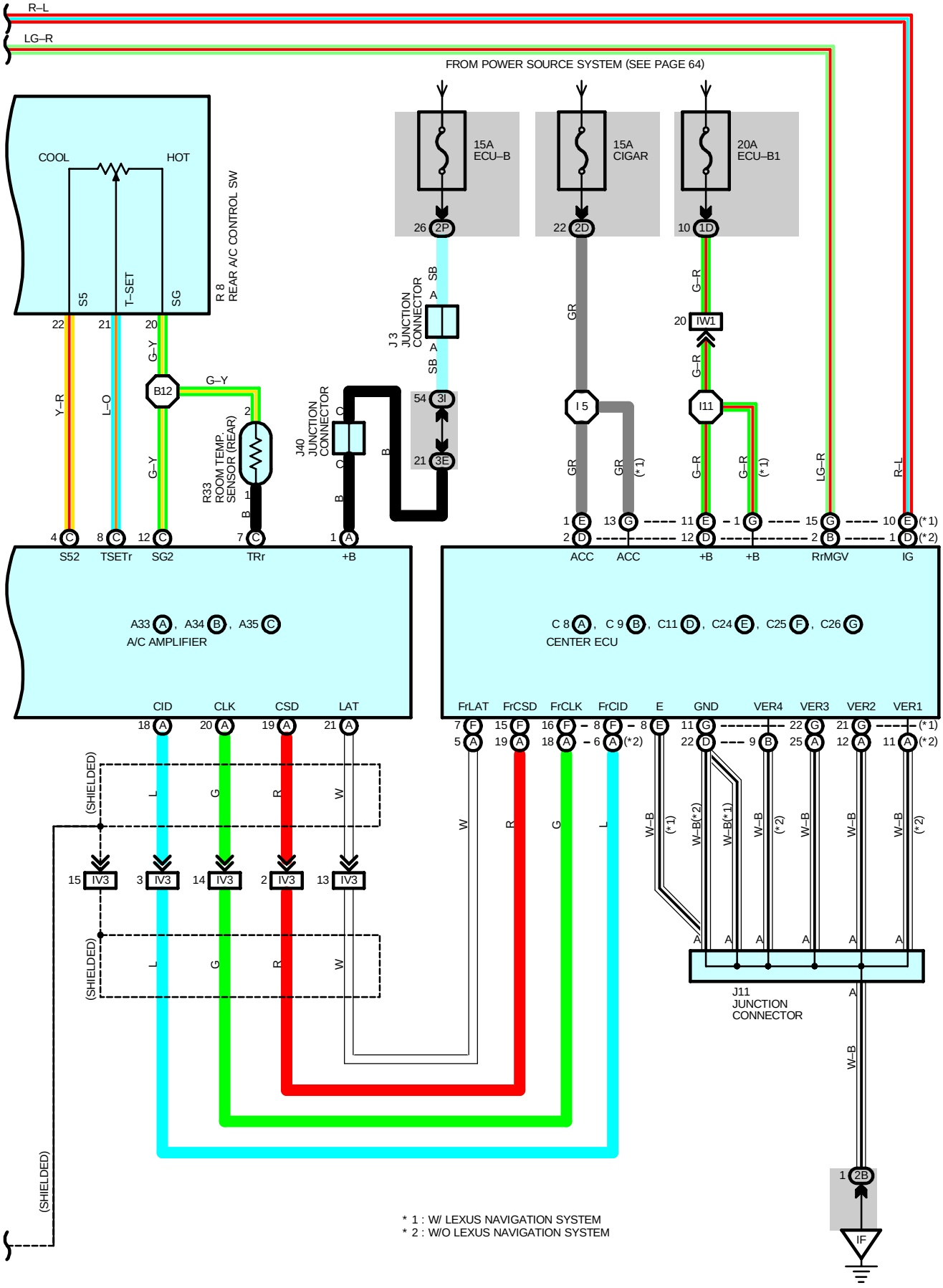
R–L
LG–R
FROM POWER SOURCE SYSTEM (SEE PAGE 64)
COOL
HOT
S5
T–SET
SG
R 8
REAR A/C CONTROL SW
15A
ECU–B
15A
CIGAR
20A
ECU–B1
26 2P
22 2D
10 1D
J 3
JUNCTION
CONNECTOR
SB
A
G–R
20 IW1
GR
B12
G–Y
Y–R
L–O
R33
ROOM TEMP.
SENSOR (REAR)
J40
JUNCTION
CONNECTOR
54 3I
21 3E
I 5
I11
(*1)
LG–R
R–L
S52
TSETr
SG2
TRr
+B
ACC
RrMGV
IG
A33 A, A34 B, A35 C
A/C AMPLIFIER
C 8 A, C 9 B, C11 D, C24 E, C25 F, C26 G
CENTER ECU
CID
CLK
CSD
LAT
FrLAT
FrCSD
FrCLK
FrCID
E
GND
VER4
VER3
VER2
VER1
(*2)
(SHIELDED)
IV3
W–B
J11
JUNCTION
CONNECTOR
1 2B
IF
* 1 : W/ LEXUS NAVIGATION SYSTEM
* 2 : W/O LEXUS NAVIGATION SYSTEM

SYSTEM OUTLINE

1. COOLER AND HEATER BLOWER OPERATION

∗ Manual operation
When the blower control SW in the rear A/C control SW is set to any blower speed, a signal is sent to the A/C amplifier. The A/C amplifier controls the power transistor and operates the rear cooler blower motor and rear heater blower motor at the set speed.

∗ Auto operation
When the auto SW in the rear A/C control SW is operated, a signal is sent to the A/C amplifier. The A/C amplifier controls the power transistor according to the signals from respective sensors, and operates the rear cooler blower motor and rear heater blower motor.

2. AIR MIX CONTROL SERVO MOTOR CONTROL

When the temperature control lever in the rear A/C control SW is operated, a signal is sent to the A/C amplifier. The A/C amplifier controls the rear air mix control servo motor to operate the damper until it reaches the temperature set by the temperature control lever.

3. AIR CONDITIONING OPERATION

The cooler and heater operation can be switched by the mode select SW in the rear A/C control SW.

SERVICE HINTS

A33 A/C AMPLIFIER

1–GROUND : Always approx. **12** volts
2–GROUND : Approx. **12** volts with ignition SW at **ON** or **ST** position
22–GROUND : Always continuity

: PARTS LOCATION

Code		See Page	Code	See Page	Code	See Page
A33	A	42	J3	41	R15	43
A34	B	42	J11	41	R16	43
A35	C	42	J31	42	R17	43
C8	A	40	J38	42	R21	43
C9	B	40	J39	42	R22	43
C11	D	40	J40	42	R23	43
C24	B	40	R8	43	R24	43
C25	F	40	R9	43	R33	43
C26	G	40	R14	43		

: JUNCTION BLOCK AND WIRE HARNESS CONNECTOR

Code	See Page	Junction Block and Wire Harness (Connector Location)
1C	23	Engine Room No.2 Wire and Engine Room J/B (Engine Compartment Left)
1D		
2B	26	Dash Wire and Cowl Side J/B LH (Left Kick Panel)
2D		
2E	26	Engine Room No.2 Wire and Cowl Side J/B LH (Left Kick Panel)
2F		
2N	26	Floor Wire and Cowl Side J/B LH (Left Kick Panel)
2P	28	Instrument Panel Integration Wire and Cowl Side J/B LH (Left Kick Panel)
3E	32	Floor No.2 Wire and Cowl Side J/B RH (Right Kick Panel)
3I	32	Instrument Panel Integration Wire and Cowl Side J/B RH (Right Kick Panel)

: CONNECTOR JOINING WIRE HARNESS AND WIRE HARNESS

Code	See Page	Joining Wire Harness and Wire Harness (Connector Location)
IR1	52	Engine Room No.2 Wire and Floor No.2 Wire (Right Kick Panel)
IV3	54	Dash Wire and Floor No.2 Wire (Behind the Glove Box)
IW1	54	Engine Room No.2 Wire and Dash Wire (Behind the Glove Box)
BF2	56	Floor No.3 Wire and Floor Wire (Left Rear Side Quarter Panel)
BM1	58	Floor No.2 Wire and A/C Sub Wire (Right Side Rear Quarter Panel)
BO1	58	Floor No.2 Wire and Floor No.3 Wire (Right Side of Rear Floor Crossmember)
BO2		

: GROUND POINTS

Code	See Page	Ground Points Location
IF	48	Set Bolt of Cowl Side J/B LH
BJ	56	Under the Driver's Seat
BK	56	Front Side Under the Front Passenger's Seat

: SPLICE POINTS

Code	See Page	Wire Harness with Splice Points	Code	See Page	Wire Harness with Splice Points
I5	50	Dash Wire	B12	58	Roof Wire
I8			B13	58	Floor No.2 Wire
I11			B16	58	A/C Sub Wire