Front Wiper and Washer (w/ Auto Wiper System)

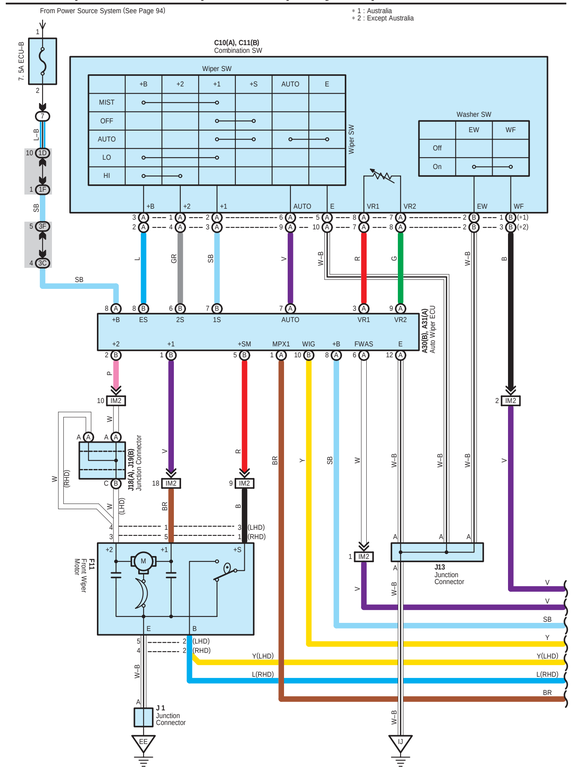

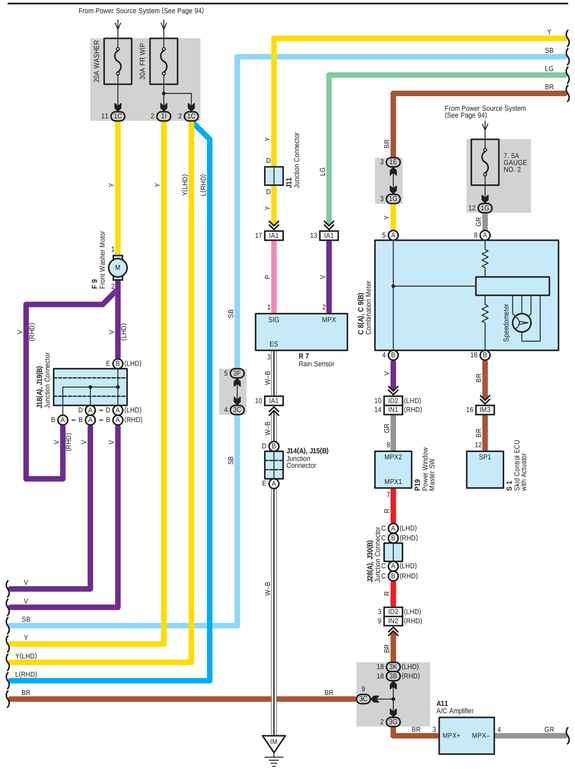
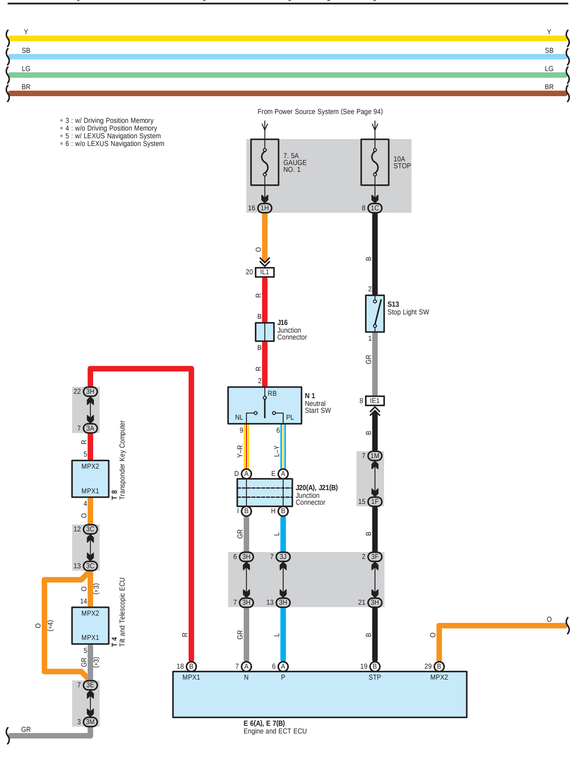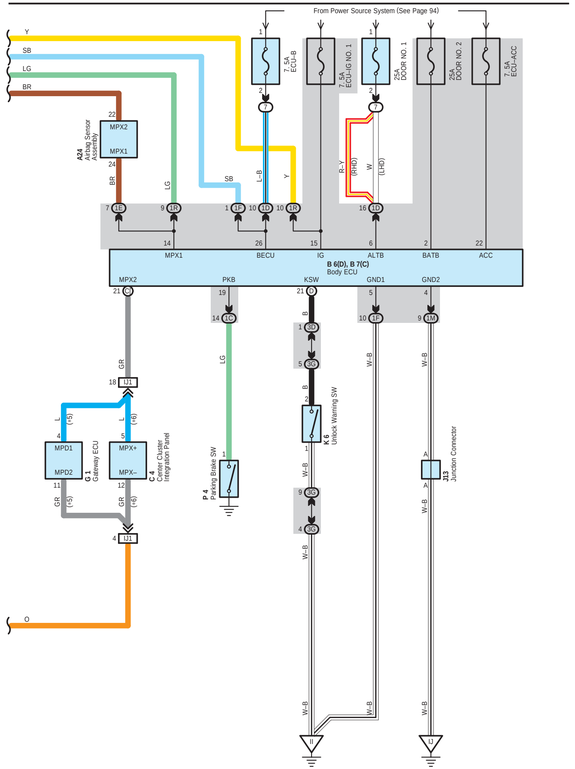
Front Wiper and Washer (w/ Auto Wiper System)