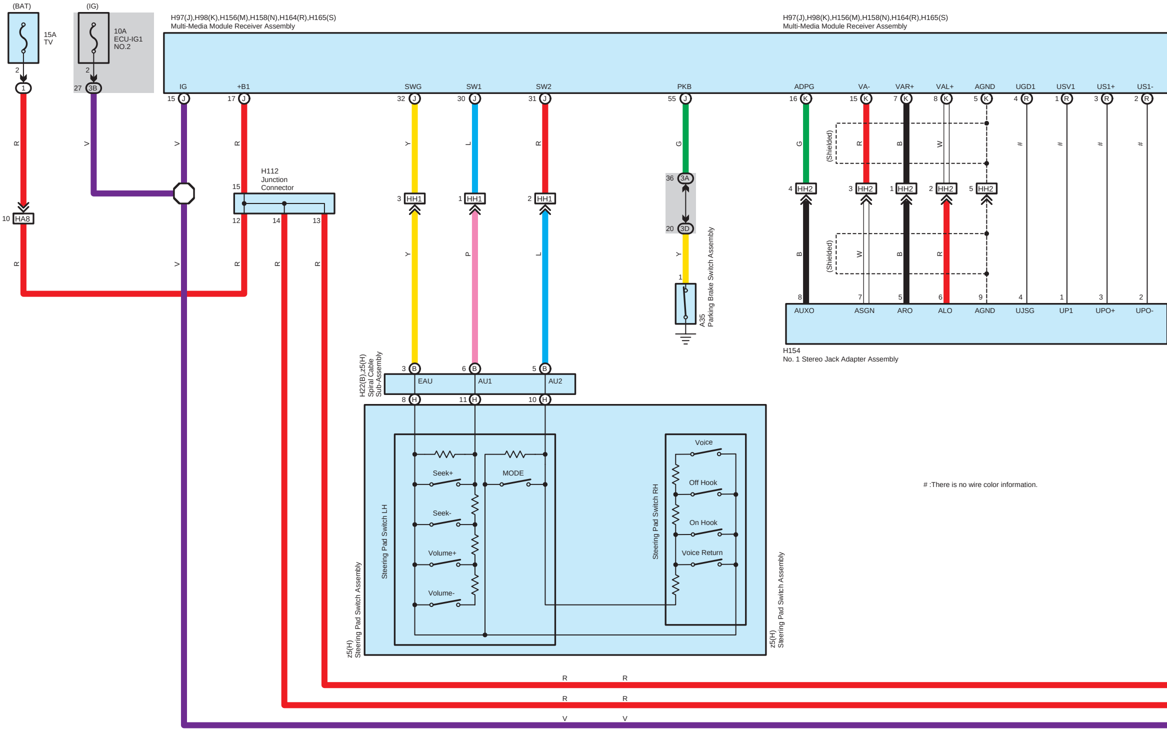
(BAT)
15A
TV
(IG)
10A
ECU-IG1
NO.2
H97(J),H98(K),H156(M),H158(N),H164(R),H165(S)
Multi-Media Module Receiver Assembly
H97(J),H98(K),H156(M),H158(N),H164(R),H165(S)
Multi-Media Module Receiver Assembly
IG
+B1
SWG
SW1
SW2
PKB
ADPG
VA-
VAR+
VAL+
AGND
UGD1
USV1
US1+
US1-
15 J
17 J
32 J
30 J
31 J
55 J
16 K
15 K
7 K
8 K
5 K
4 R
1 R
3 R
2 R
2
1
2
27 3B
R
V
V
R
Y
L
R
G
G
R
B
W
#
#
#
#
(Shielded)
(Shielded)
H112
Junction
Connector
15
12
14
13
10 HA8
3 HH1
1 HH1
2 HH1
36 3A
20 3D
4 HH2
3 HH2
1 HH2
2 HH2
5 HH2
B
W
B
R
Y
P
L
Y
R
V
R
R
R
1
A35
Parking Brake Switch Assembly
8
7
5
6
9
4
1
3
2
AUXO
ASGN
ARO
ALO
AGND
UJSG
UP1
UPO+
UPO-
H154
No. 1 Stereo Jack Adapter Assembly
H22(B),z5(H)
Spiral Cable
Sub-Assembly
3 B
6 B
5 B
EAU
AU1
AU2
8 H
11 H
10 H
Steering Pad Switch LH
Seek+
Seek-
Volume+
Volume-
MODE
Steering Pad Switch RH
Voice
Off Hook
On Hook
Voice Return
z5(H)
Steering Pad Switch Assembly
z5(H)
Steering Pad Switch Assembly
R
R
R
R
V
V

# :There is no wire color information.

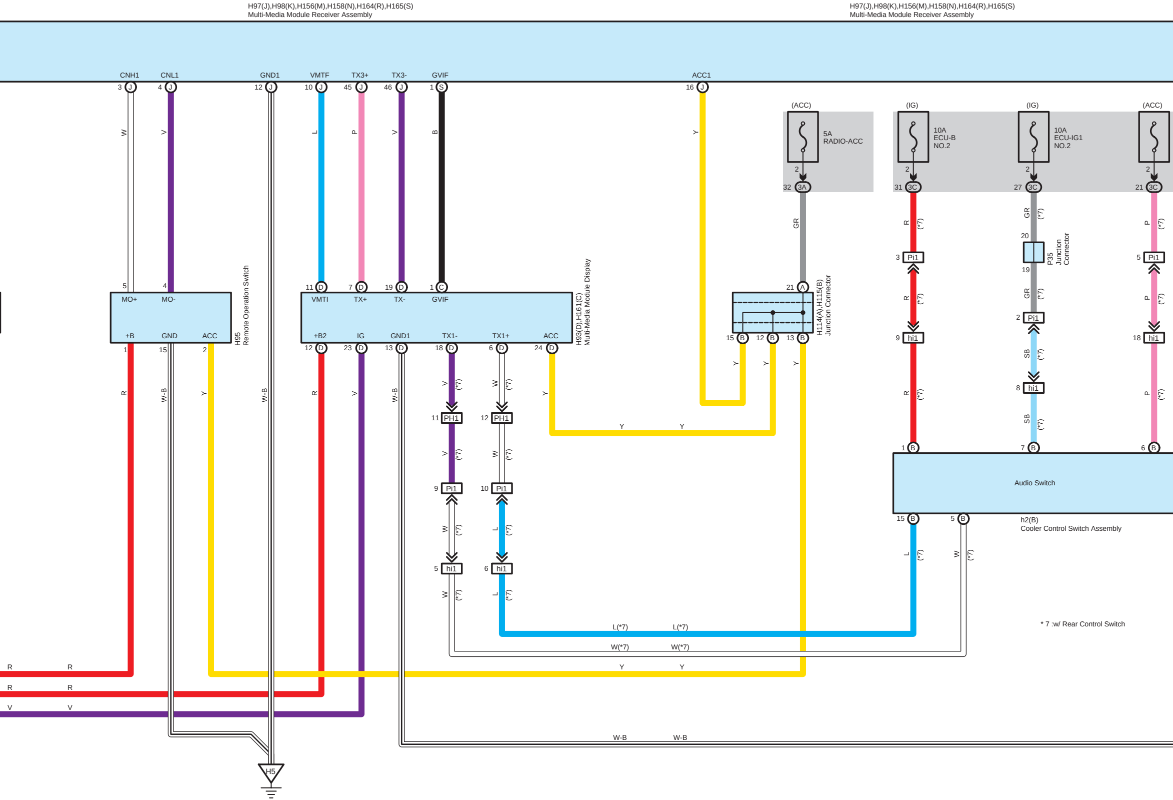
H97(J),H98(K),H156(M),H158(N),H164(R),H165(S)
Multi-Media Module Receiver Assembly
H97(J),H98(K),H156(M),H158(N),H164(R),H165(S)
Multi-Media Module Receiver Assembly
CNH1
CNL1
GND1
VMTF
TX3+
TX3-
GVIF
ACC1
3 J
4 J
12 J
10 J
45 J
46 J
1 S
16 J
W
V
L
P
V
B
Y
(ACC)
5A
RADIO-ACC
2
32 3A
GR
(IG)
10A
ECU-B
NO.2
2
31 3C
R (*7)
(IG)
10A
ECU-IG1
NO.2
2
27 3C
GR (*7)
20
P35
Junction
Connector
19
GR (*7)
(ACC)
2
21 3C
P (*7)
3 Pi1
R (*7)
9 hi1
R (*7)
1 B
2 Pi1
SB (*7)
8 hi1
SB (*7)
7 B
5 Pi1
P (*7)
18 hi1
P (*7)
6 B
Audio Switch
15 B
5 B
h2(B)
Cooler Control Switch Assembly
L (*7)
W (*7)
* 7 :w/ Rear Control Switch
5
4
MO+
MO-
+B
GND
ACC
1
15
2
H95
Remote Operation Switch
R
W-B
Y
W-B
11 D
7 D
19 D
1 C
VMTI
TX+
TX-
GVIF
+B2
IG
GND1
TX1-
TX1+
ACC
12 D
23 D
13 D
18 D
6 D
24 D
H93(D),H161(C)
Multi-Media Module Display
R
V
W-B
V (*7)
W (*7)
Y
11 PH1
12 PH1
V (*7)
W (*7)
9 Pi1
10 Pi1
W (*7)
L (*7)
5 hi1
6 hi1
W (*7)
L (*7)
21 A
H114(A),H115(B)
Junction Connector
15 B
12 B
13 B
Y
Y
Y
Y
Y
L(*7)
L(*7)
W(*7)
W(*7)
R
R
Y
Y
R
R
V
V
W-B
W-B
H5

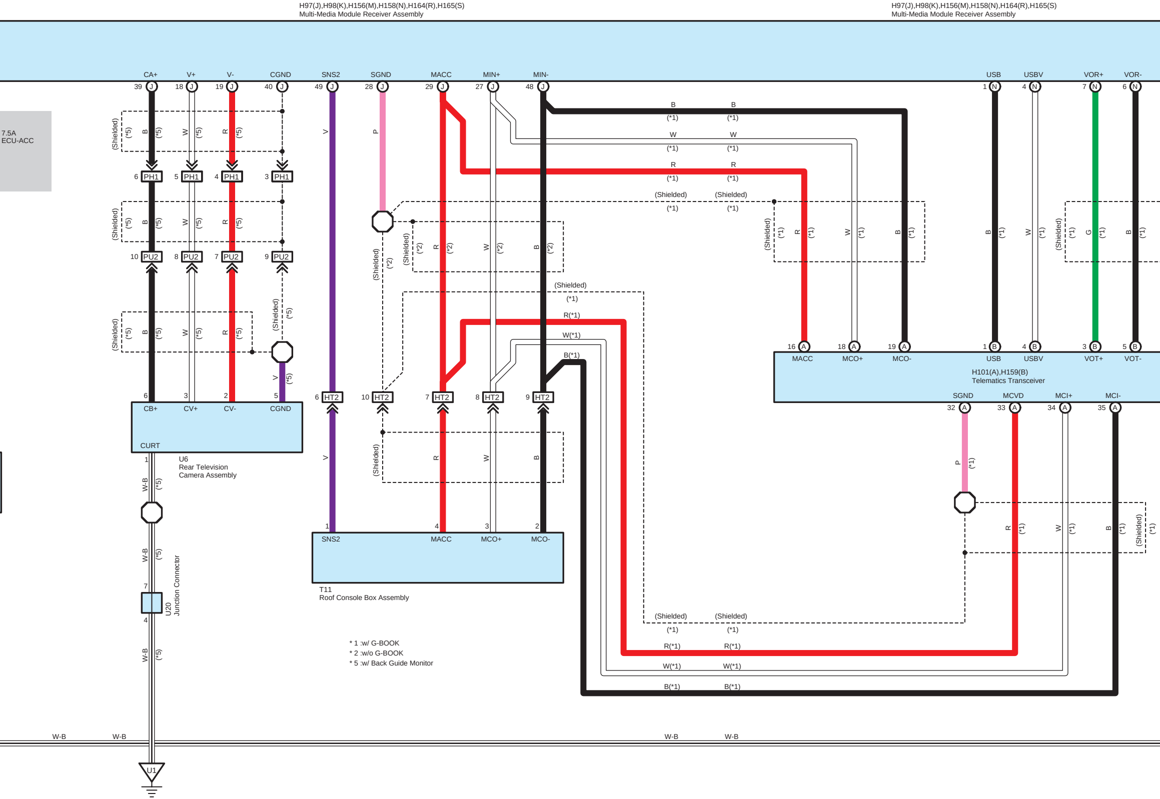
H97(J),H98(K),H156(M),H158(N),H164(R),H165(S)
Multi-Media Module Receiver Assembly
H97(J),H98(K),H156(M),H158(N),H164(R),H165(S)
Multi-Media Module Receiver Assembly
CA+
V+
V-
CGND
SNS2
SGND
MACC
MIN+
MIN-
USB
USBV
VOR+
VOR-
39 J
18 J
19 J
40 J
49 J
28 J
29 J
27 J
48 J
1 N
4 N
7 N
6 N
7.5A
ECU-ACC
(Shielded)
(*5)
B
W
R
6 PH1
5 PH1
4 PH1
3 PH1
10 PU2
8 PU2
7 PU2
9 PU2
V
P
B
W
R
(*1)
(Shielded)
(*2)
G
6
3
2
5
CB+
CV+
CV-
CGND
CURT
U6
Rear Television
Camera Assembly
1
W-B
7
4
U20
Junction Connector
6 HT2
10 HT2
7 HT2
8 HT2
9 HT2
R(*1)
W(*1)
B(*1)
16 A
18 A
19 A
1 B
4 B
3 B
5 B
MACC
MCO+
MCO-
USB
USBV
VOT+
VOT-
H101(A),H159(B)
Telematics Transceiver
SGND
MCVD
MCI+
MCI-
32 A
33 A
34 A
35 A
1
4
3
2
SNS2
MACC
MCO+
MCO-
T11
Roof Console Box Assembly
W-B
U1

* 1 :w/ G-BOOK
* 2 :w/o G-BOOK
* 5 :w/ Back Guide Monitor

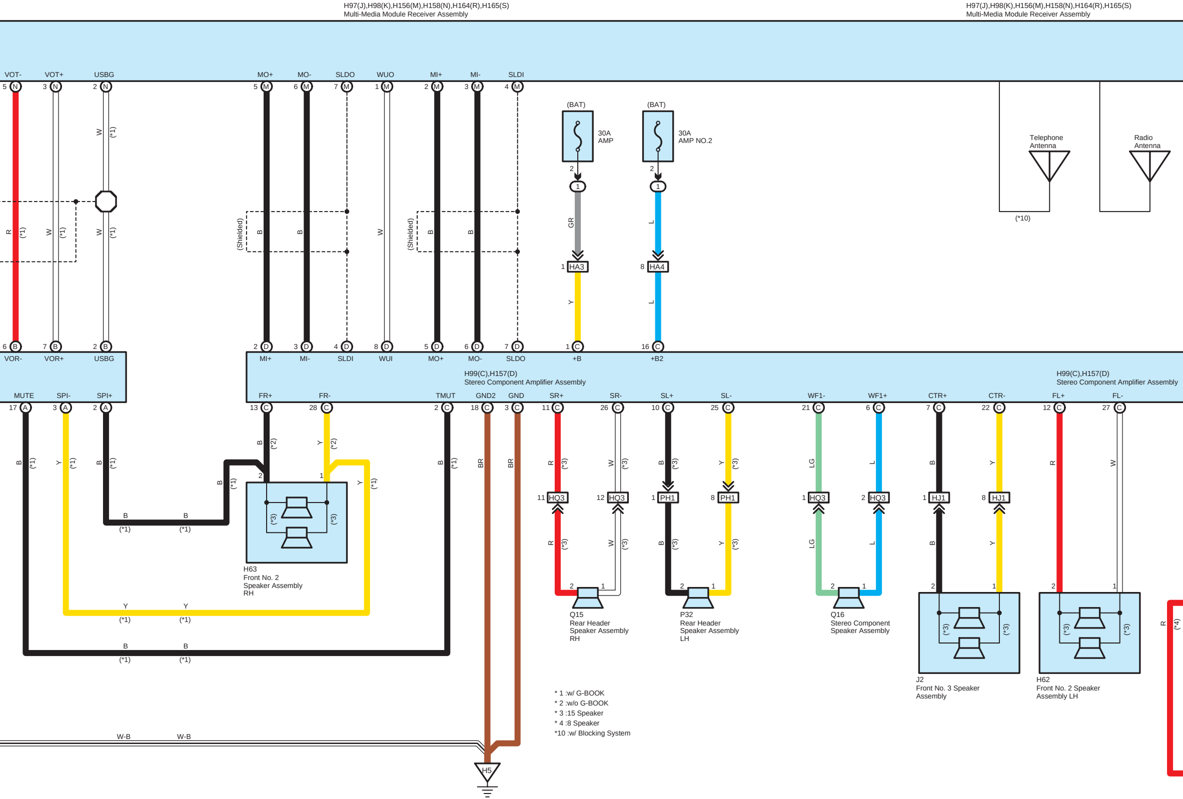
H97(J),H98(K),H156(M),H158(N),H164(R),H165(S)
Multi-Media Module Receiver Assembly
VOT-
VOT+
USBG
MO+
MO-
SLDO
WUO
MI+
MI-
SLDI
(BAT)
30A
AMP
30A
AMP NO.2
Telephone
Antenna
Radio
Antenna
(*10)
(Shielded)
GR
L
Y
HA3
HA4
VOR-
VOR+
USBG
MI+
MI-
SLDI
WUI
MO+
MO-
SLDO
+B
+B2
H99(C),H157(D)
Stereo Component Amplifier Assembly
MUTE
SPI-
SPI+
FR+
FR-
TMUT
GND2
GND
SR+
SR-
SL+
SL-
WF1-
WF1+
CTR+
CTR-
FL+
FL-
HQ3
PH1
HJ1
H63
Front No. 2
Speaker Assembly
RH
Q15
Rear Header
Speaker Assembly
RH
P32
Rear Header
Speaker Assembly
LH
Q16
Stereo Component
Speaker Assembly
J2
Front No. 3 Speaker
Assembly
H62
Front No. 2 Speaker
Assembly LH
W-B
H5
(*1)
(*2)
(*3)
(*4)

* 1 :w/ G-BOOK
* 2 :w/o G-BOOK
* 3 :15 Speaker
* 4 :8 Speaker
*10 :w/ Blocking System

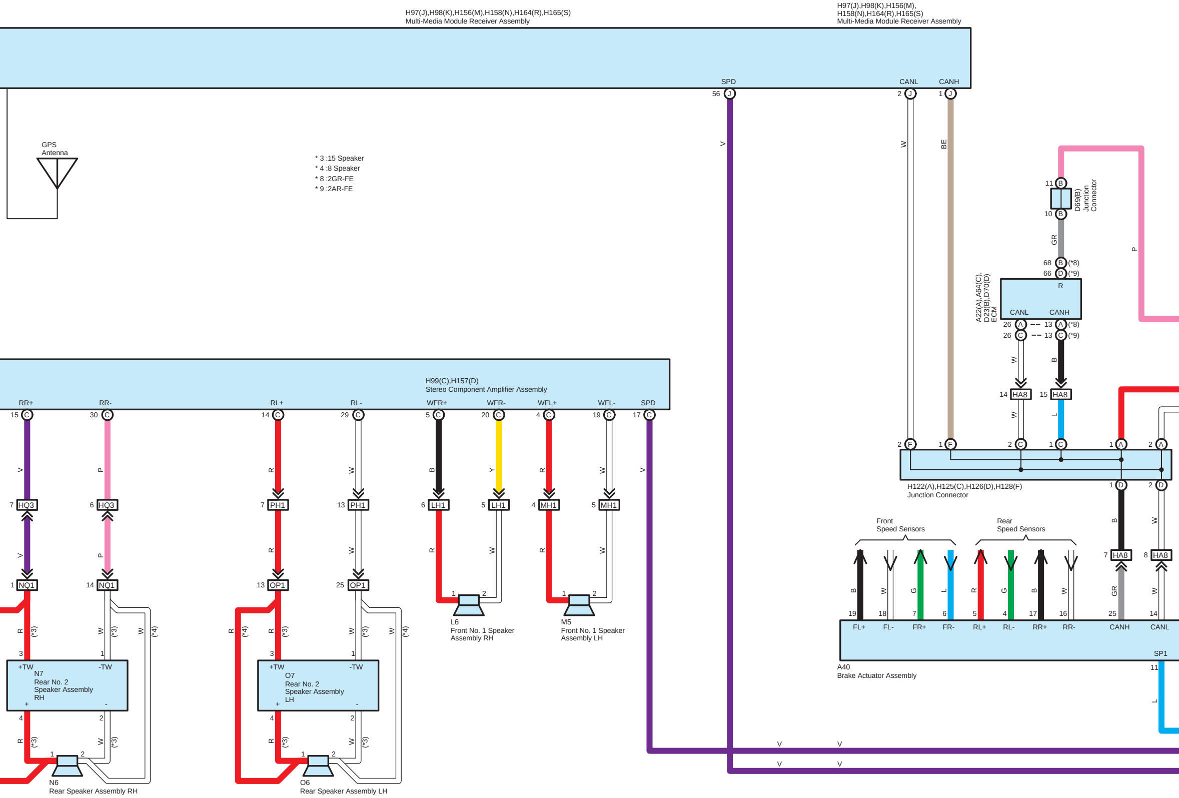
H97(J),H98(K),H156(M),H158(N),H164(R),H165(S)
Multi-Media Module Receiver Assembly
H97(J),H98(K),H156(M),
H158(N),H164(R),H165(S)
Multi-Media Module Receiver Assembly
SPD
56 J
V
CANL
2 J
W
CANH
1 J
BE
GPS
Antenna
11 B
10 B
D69(B)
Junction
Connector
GR
P
68 B (*8)
66 D (*9)
A22(A),A64(C),
D23(B),D70(D)
ECM
R
CANL
CANH
26 A
13 A (*8)
26 C
13 C (*9)
W
B
14 HA8
15 HA8
W
L
H99(C),H157(D)
Stereo Component Amplifier Assembly
RR+
15 C
RR-
30 C
RL+
14 C
RL-
29 C
WFR+
5 C
WFR-
20 C
WFL+
4 C
WFL-
19 C
SPD
17 C
V
P
R
W
B
Y
R
W
V
7 HQ3
6 HQ3
7 PH1
13 PH1
6 LH1
5 LH1
4 MH1
5 MH1
V
P
R
W
R
W
R
W
1 NQ1
14 NQ1
13 OP1
25 OP1
1
2
L6
Front No. 1 Speaker
Assembly RH
1
2
M5
Front No. 1 Speaker
Assembly LH
R (*3)
W (*3)
W (*4)
R (*4)
R (*3)
W (*3)
W (*4)
3
1
+TW
-TW
N7
Rear No. 2
Speaker Assembly
RH
+
-
4
2
R (*3)
W (*3)
1
2
N6
Rear Speaker Assembly RH
3
1
+TW
-TW
O7
Rear No. 2
Speaker Assembly
LH
+
-
4
2
R (*3)
W (*3)
1
2
O6
Rear Speaker Assembly LH
2 F
1 F
2 C
1 C
1 A
2 A
H122(A),H125(C),H126(D),H128(F)
Junction Connector
1 D
2 D
B
W
7 HA8
8 HA8
Front
Speed Sensors
Rear
Speed Sensors
B
W
G
L
R
G
B
W
GR
W
19
18
7
6
5
4
17
16
25
14
FL+
FL-
FR+
FR-
RL+
RL-
RR+
RR-
CANH
CANL
SP1
11
L
A40
Brake Actuator Assembly
V
V
V
V

* 3 :15 Speaker
* 4 :8 Speaker
* 8 :2GR-FE
* 9 :2AR-FE

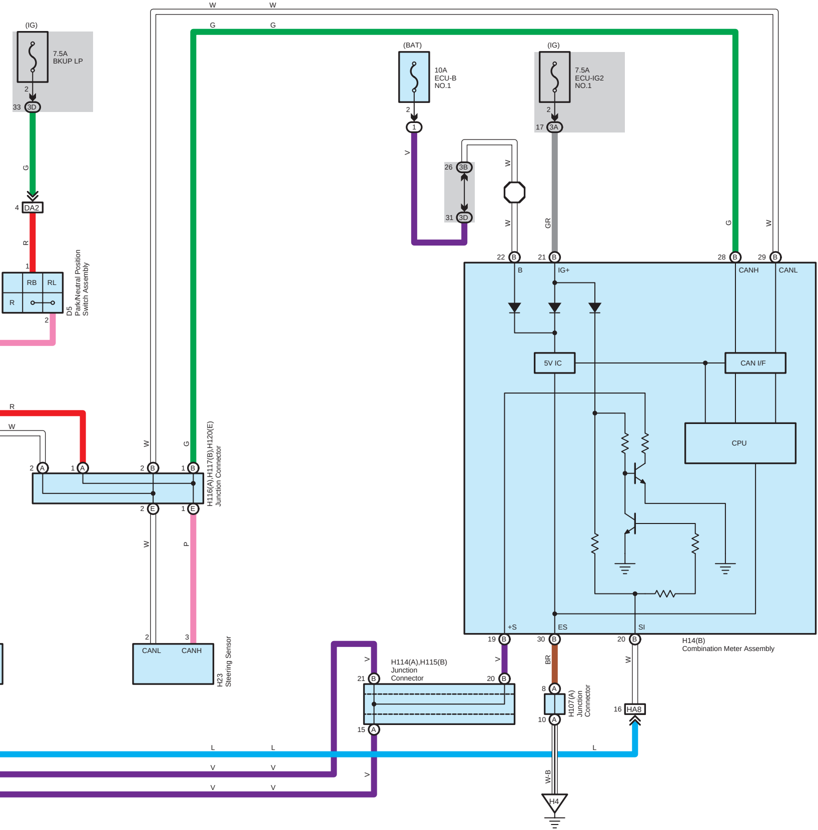
W
W
G
G
(IG)
7.5A
BKUP LP
2
33
3D
(BAT)
10A
ECU-B
NO.1
2
1
V
(IG)
7.5A
ECU-IG2
NO.1
2
17
3A
26
3B
31
3D
W
W
GR
G
W
4
DA2
R
1
RB
RL
R
2
D5
Park/Neutral Position
Switch Assembly
22
B
21
B
28
B
29
B
B
IG+
CANH
CANL
5V IC
CAN I/F
CPU
+S
ES
SI
19
B
30
B
20
B
H14(B)
Combination Meter Assembly
R
W
2
A
1
A
2
B
1
B
W
G
2
E
1
E
H116(A),H117(B),H120(E)
Junction Connector
W
P
2
3
CANL
CANH
H23
Steering Sensor
V
V
BR
W
21
B
20
B
H114(A),H115(B)
Junction
Connector
15
A
8
A
10
A
H107(A)
Junction
Connector
16
HA8
L
L
L
V
V
V
V
V
W-B
H4