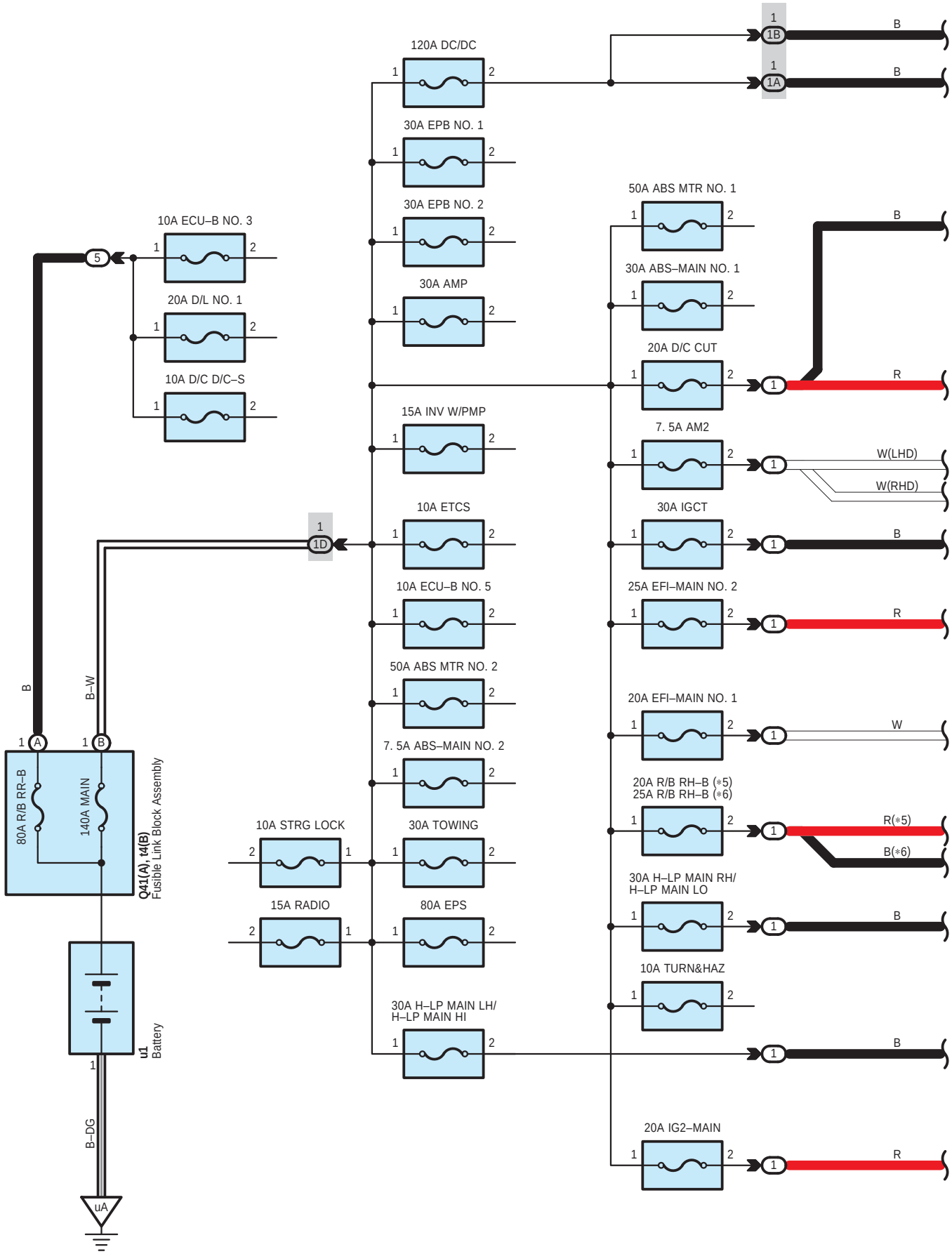
120A DC/DC
30A EPB NO. 1
30A EPB NO. 2
30A AMP
10A ECU–B NO. 3
20A D/L NO. 1
10A D/C D/C–S
15A INV W/PMP
10A ETCS
10A ECU–B NO. 5
50A ABS MTR NO. 2
7. 5A ABS–MAIN NO. 2
10A STRG LOCK
30A TOWING
15A RADIO
80A EPS
30A H–LP MAIN LH/
H–LP MAIN HI
50A ABS MTR NO. 1
30A ABS–MAIN NO. 1
20A D/C CUT
7. 5A AM2
30A IGCT
25A EFI–MAIN NO. 2
20A EFI–MAIN NO. 1
20A R/B RH–B (*5)
25A R/B RH–B (*6)
30A H–LP MAIN RH/
H–LP MAIN LO
10A TURN&HAZ
20A IG2–MAIN
W(LHD)
W(RHD)
R(*5)
B(*6)
80A R/B RR–B
140A MAIN
Q41(A), t4(B)
Fusible Link Block Assembly
u1
Battery
B–W
B–DG

＊5 : Before Sep. 2017 Production
＊6 : From Sep. 2017 Production

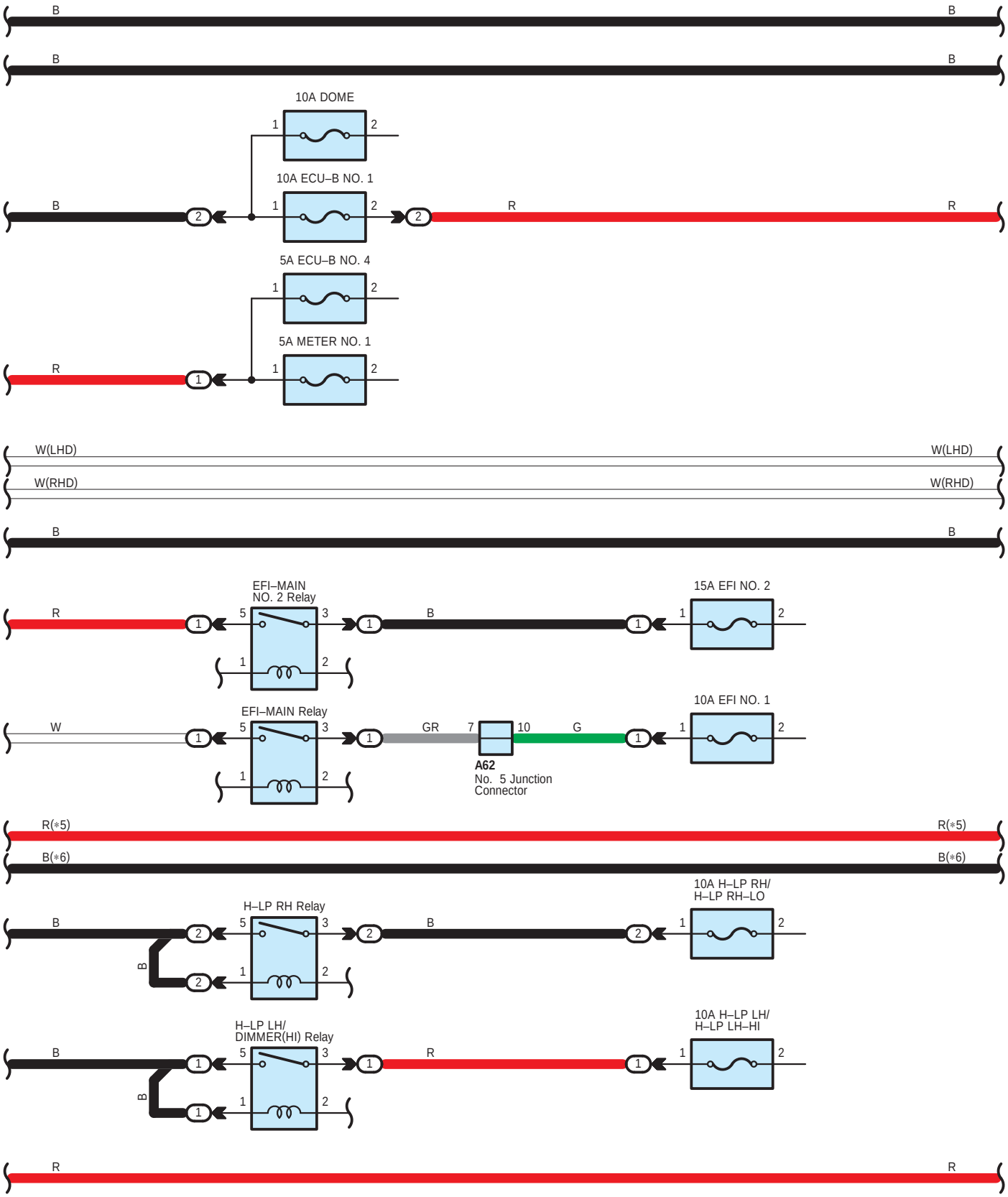

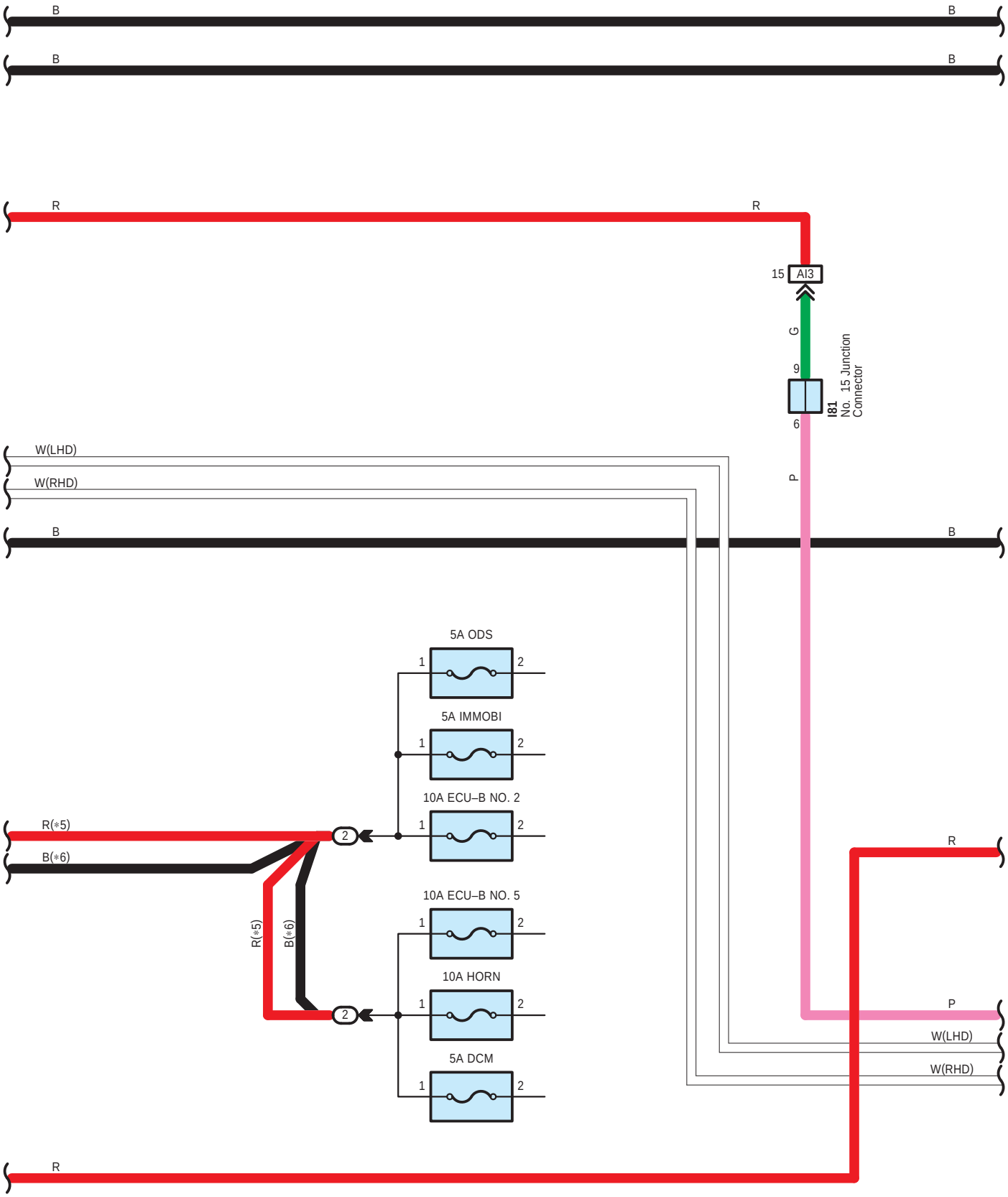
B
B
B
B
R
R
15
AI3
G
9
6
I81
No. 15 Junction Connector
P
W(LHD)
W(RHD)
B
B
5A ODS
5A IMMOBI
10A ECU–B NO. 2
10A ECU–B NO. 5
10A HORN
5A DCM
1
2
R(*5)
B(*6)
R(*5)
B(*6)
2
2
R
P
W(LHD)
W(RHD)
R

＊5 : Before Sep. 2017 Production
＊6 : From Sep. 2017 Production

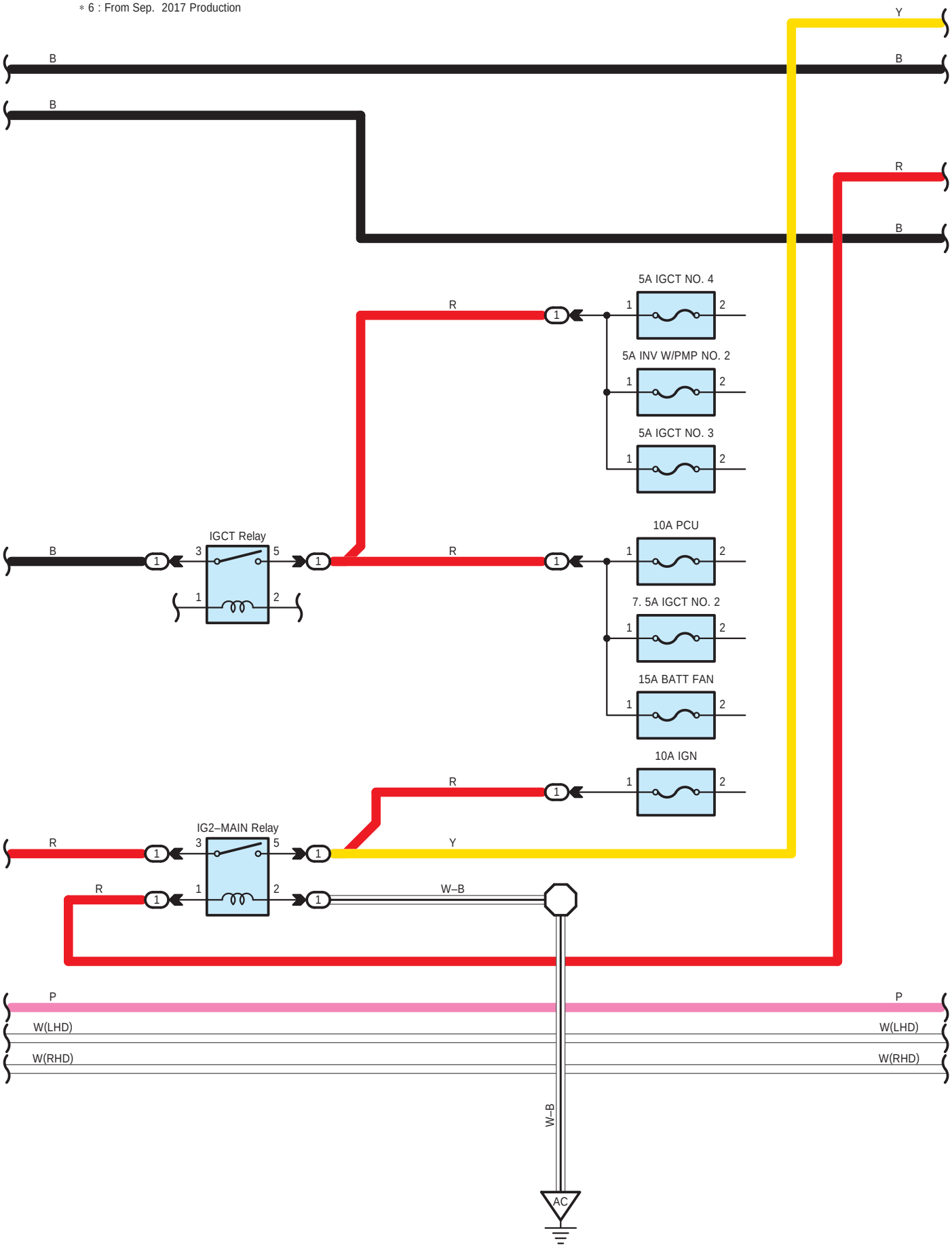

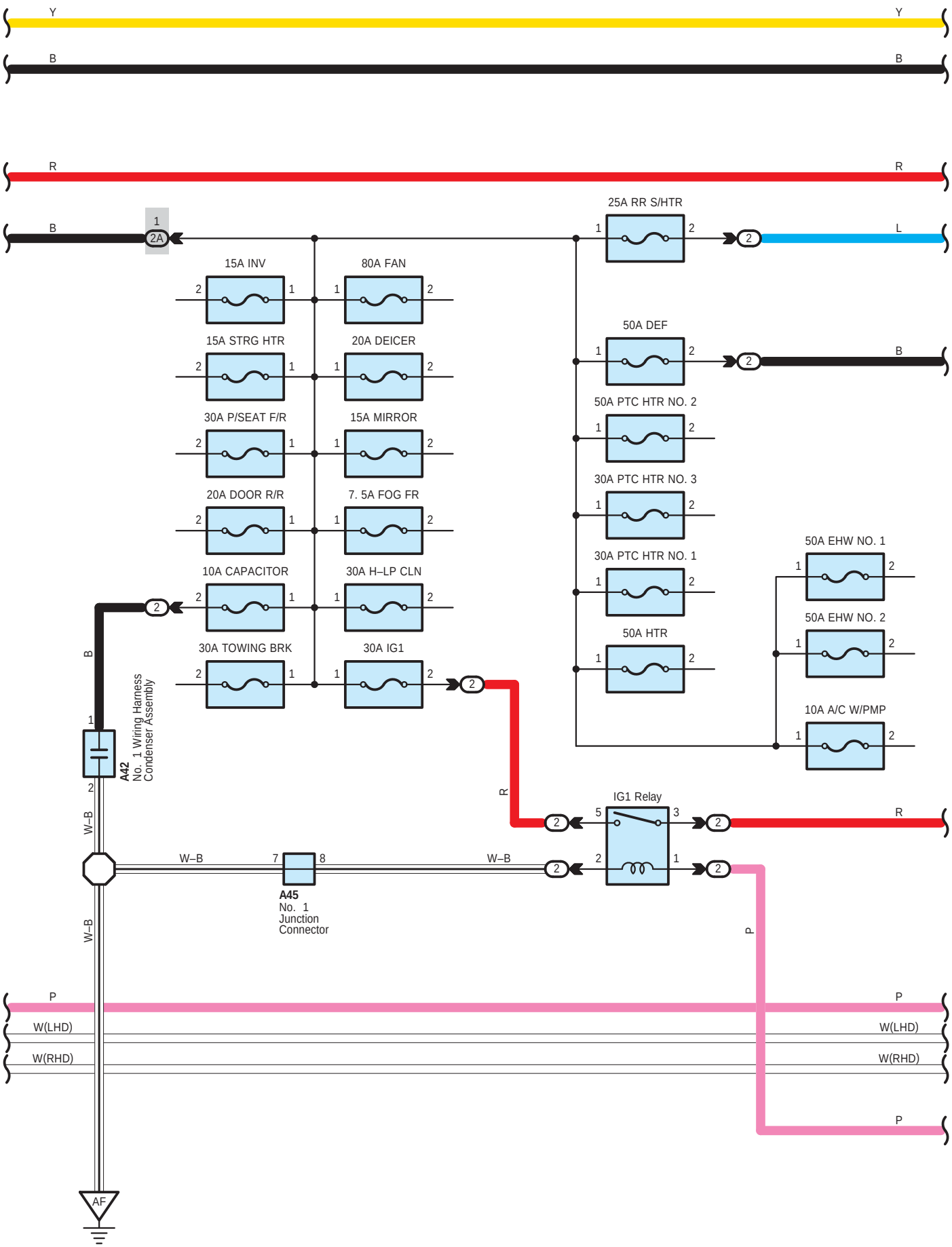
Y
Y
B
B
R
R
B
1
2A
25A RR S/HTR
L
15A INV
80A FAN
15A STRG HTR
20A DEICER
50A DEF
B
30A P/SEAT F/R
15A MIRROR
50A PTC HTR NO. 2
20A DOOR R/R
7. 5A FOG FR
30A PTC HTR NO. 3
50A EHW NO. 1
10A CAPACITOR
30A H–LP CLN
30A PTC HTR NO. 1
50A EHW NO. 2
30A TOWING BRK
30A IG1
50A HTR
10A A/C W/PMP
B
A42
No. 1 Wiring Harness
Condenser Assembly
R
IG1 Relay
R
W–B
W–B
W–B
A45
No. 1
Junction
Connector
W–B
P
P
P
W(LHD)
W(LHD)
W(RHD)
W(RHD)
P
AF

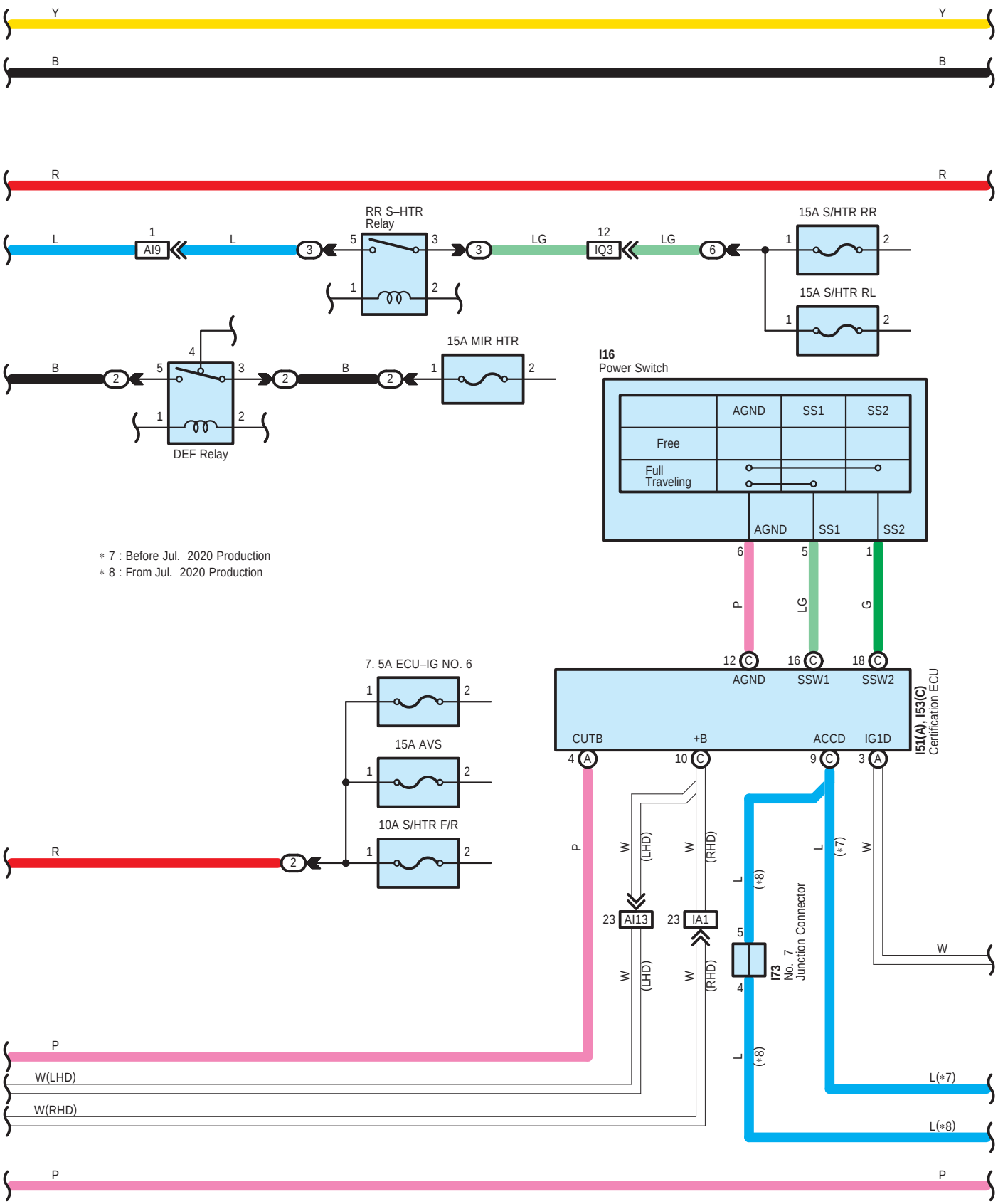

∗ 7 : Before Jul. 2020 Production
∗ 8 : From Jul. 2020 Production

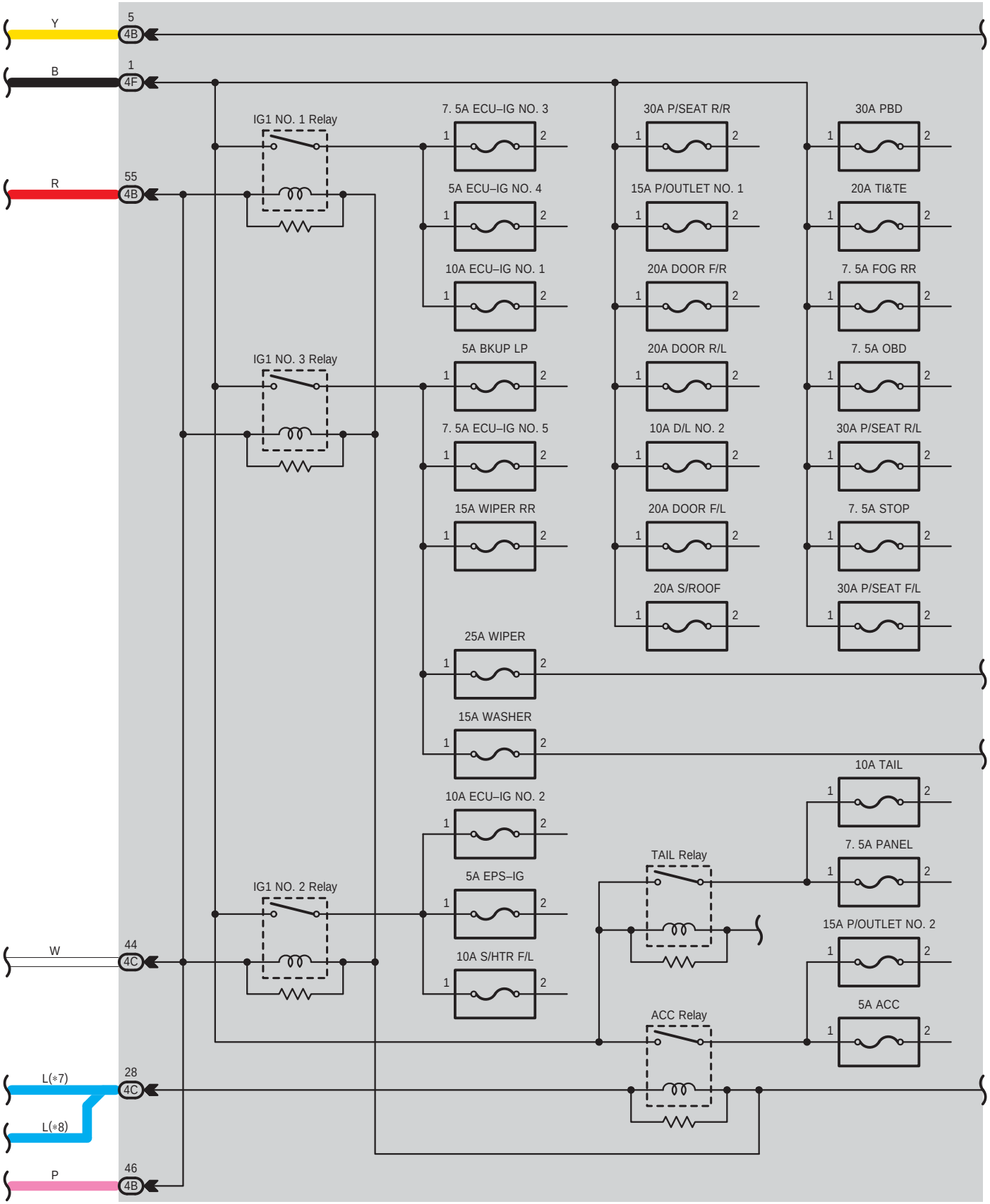
Y
5
4B
B
1
4F
R
55
4B
W
44
4C
L(*7)
L(*8)
28
4C
P
46
4B
IG1 NO. 1 Relay
IG1 NO. 3 Relay
IG1 NO. 2 Relay
7. 5A ECU–IG NO. 3
5A ECU–IG NO. 4
10A ECU–IG NO. 1
5A BKUP LP
7. 5A ECU–IG NO. 5
15A WIPER RR
25A WIPER
15A WASHER
10A ECU–IG NO. 2
5A EPS–IG
10A S/HTR F/L
30A P/SEAT R/R
15A P/OUTLET NO. 1
20A DOOR F/R
20A DOOR R/L
10A D/L NO. 2
20A DOOR F/L
20A S/ROOF
30A PBD
20A TI&TE
7. 5A FOG RR
7. 5A OBD
30A P/SEAT R/L
7. 5A STOP
30A P/SEAT F/L
10A TAIL
7. 5A PANEL
15A P/OUTLET NO. 2
5A ACC
TAIL Relay
ACC Relay

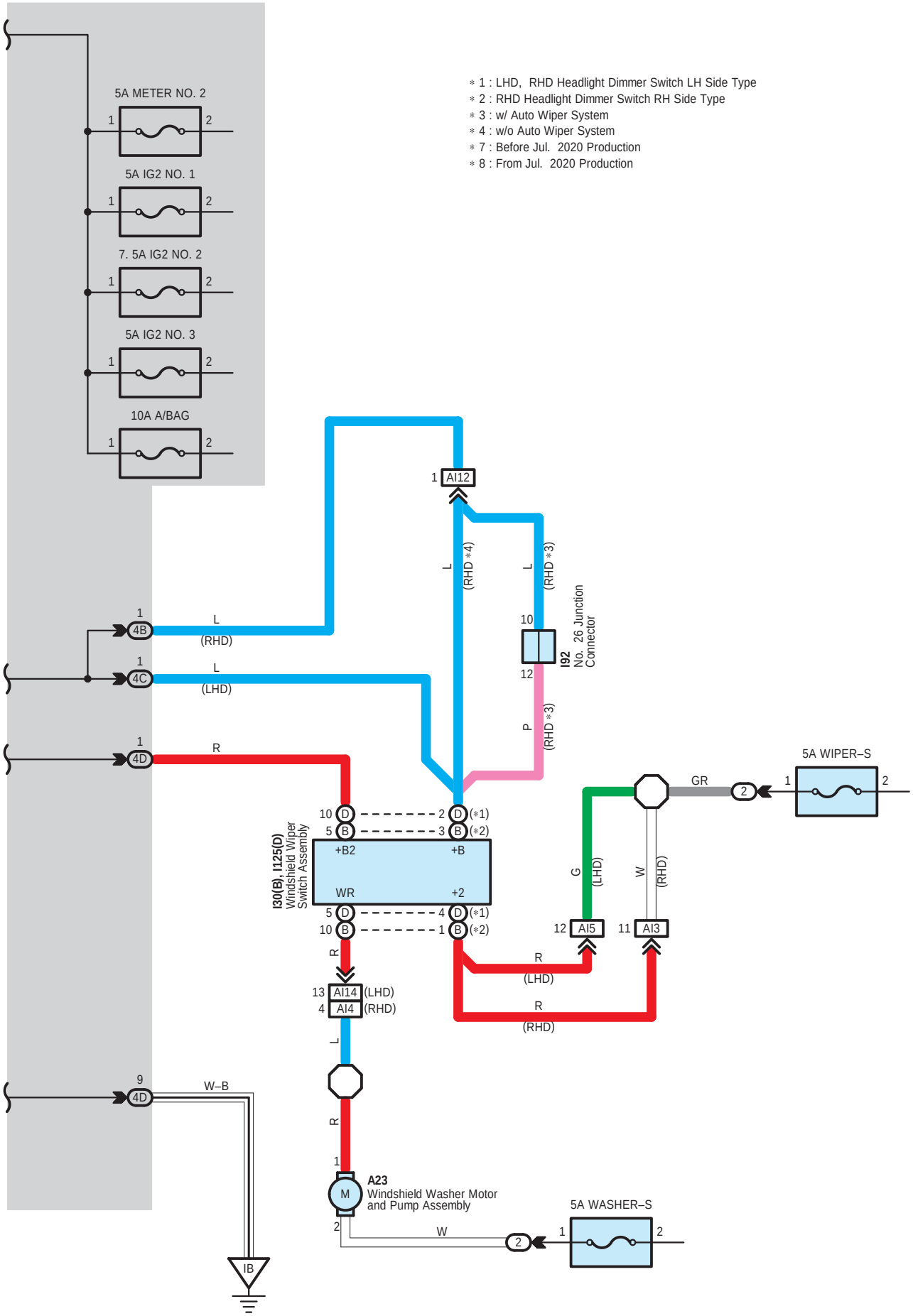
5A METER NO. 2
5A IG2 NO. 1
7. 5A IG2 NO. 2
5A IG2 NO. 3
10A A/BAG
∗1 : LHD, RHD Headlight Dimmer Switch LH Side Type
∗2 : RHD Headlight Dimmer Switch RH Side Type
∗3 : w/ Auto Wiper System
∗4 : w/o Auto Wiper System
∗7 : Before Jul. 2020 Production
∗8 : From Jul. 2020 Production
AI12
I92
No. 26 Junction Connector
I30(B), I125(D)
Windshield Wiper Switch Assembly
+B2
+B
WR
+2
AI14 (LHD)
AI4 (RHD)
AI5
AI3
5A WIPER–S
5A WASHER–S
A23
Windshield Washer Motor and Pump Assembly
IB

A23
Black

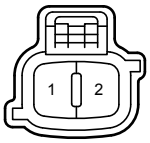

90980-11019

A42
Black

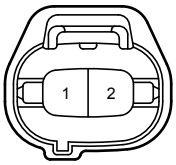

90980-11156

A45
White

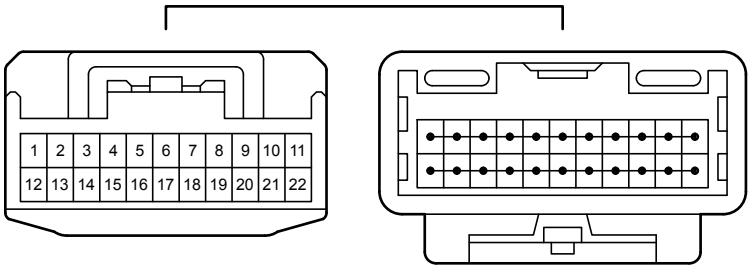

90980-12372

A62
Black

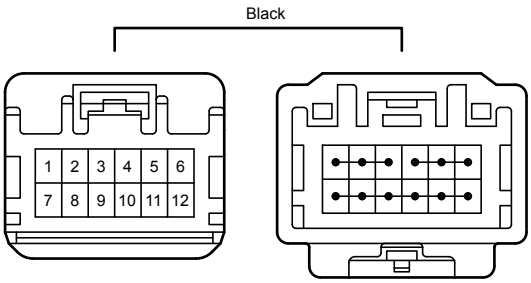

90980-12737

I16
Black

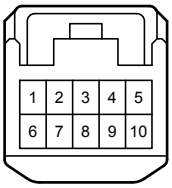

90980-12368

I30
White

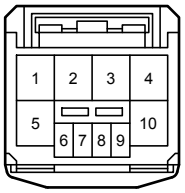

90980-12359

I51
White

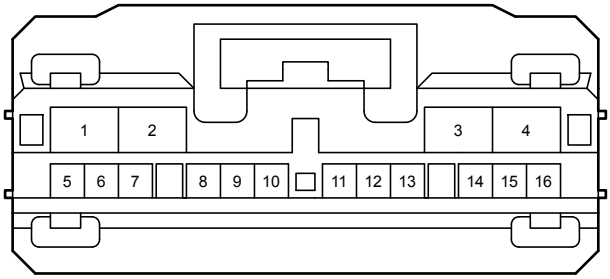

90980-12763

I53
Black

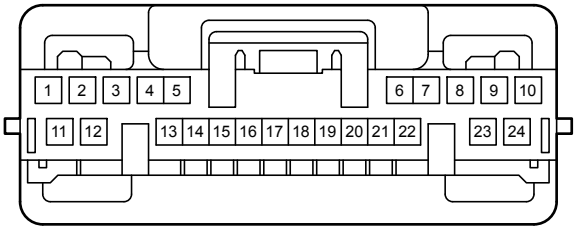

90980-12A42

I73
White

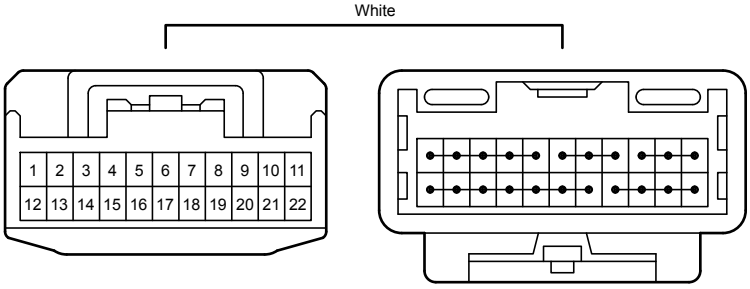

90980-12372

I81
Gray

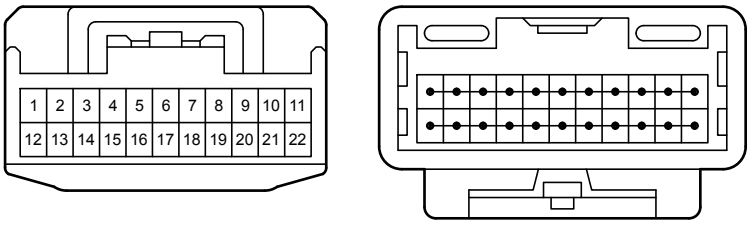

90980-12372

I92
White

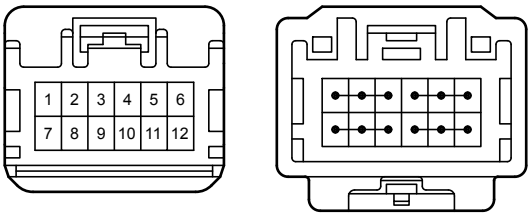

90980-12737

I125
White

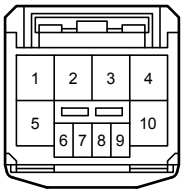

90980-12359

Q41

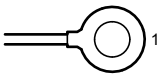

t4

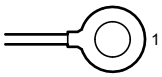

u1

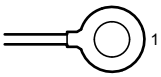

1A
White

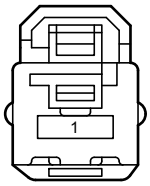

90980-12796

1B
White

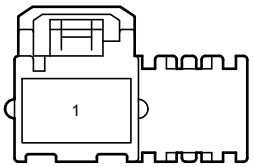

82824-74010

1D

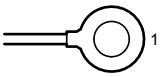

2A
White

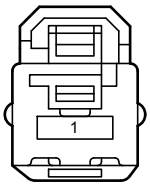

90980-12796

4B
White

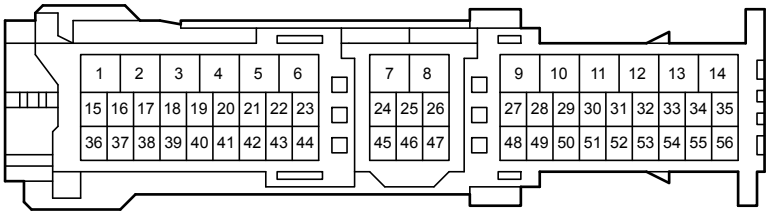

90980-12A15

4C
White

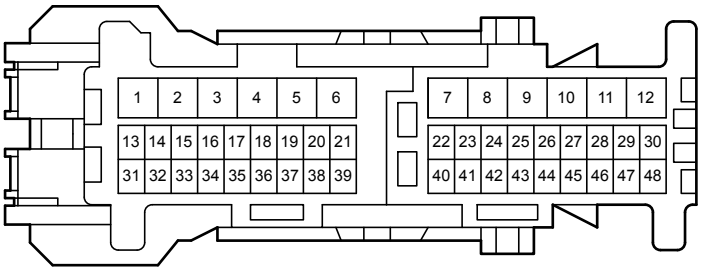

90980-12887

4D
White

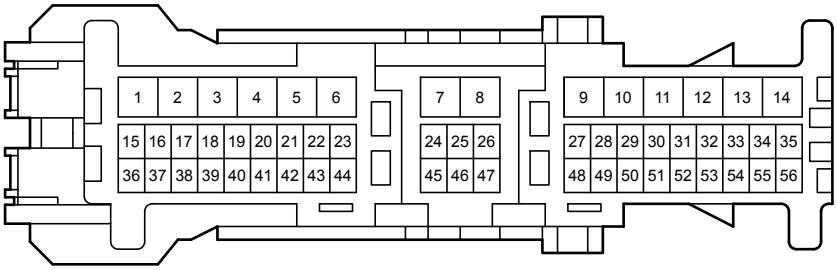

90980-12890

4F
White

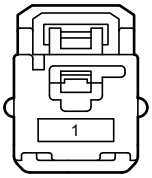

90980-12756

AI3
White

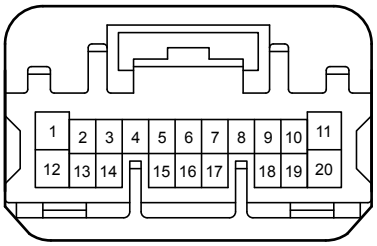

90980-12741

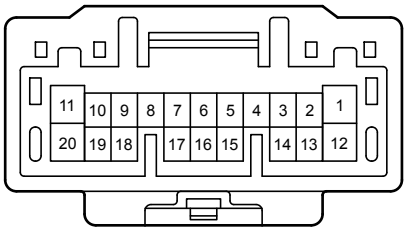

90980-12740

(LHD)

AI3
Blue

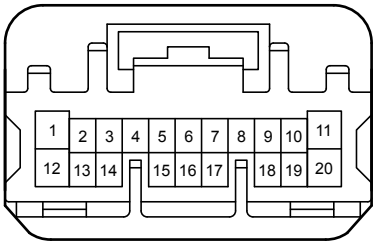

90980-12741

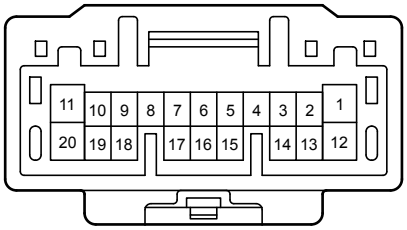

90980-12740

(RHD)

AI4
Black

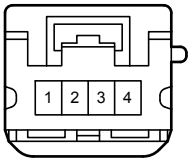

90980-12733

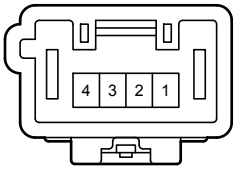

90980-12732

AI5
White

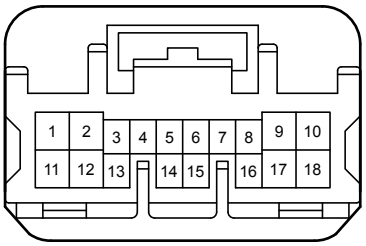

90980-12739

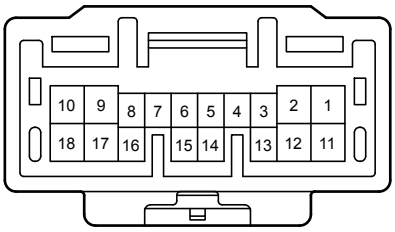

90980-12738

(LHD)

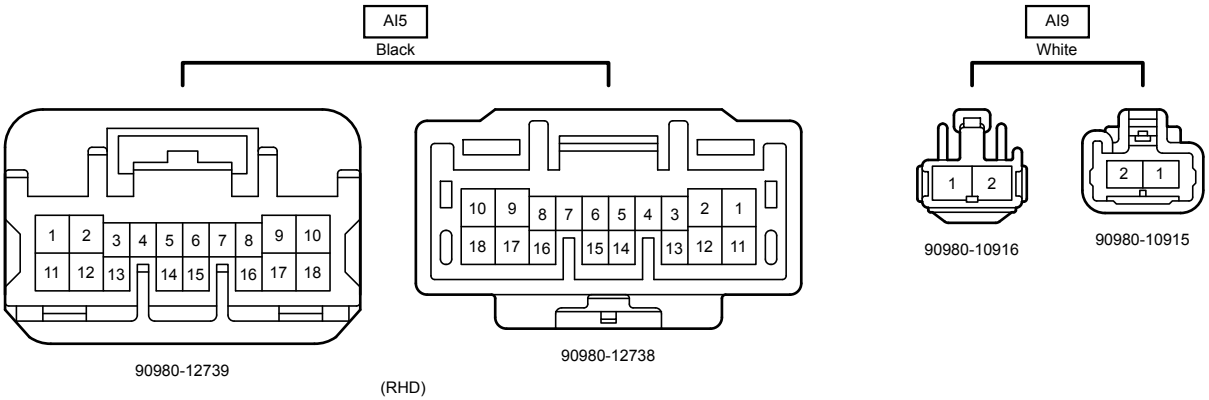
AI5
Black
AI9
White
90980-12739
90980-12738
(RHD)
90980-10916
90980-10915

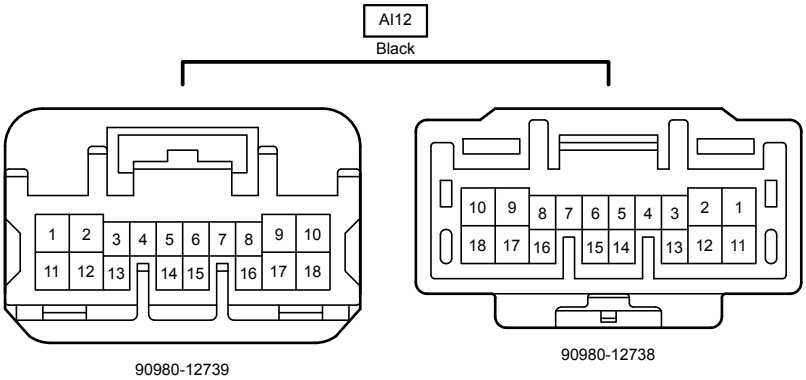
AI12
Black
90980-12739
90980-12738

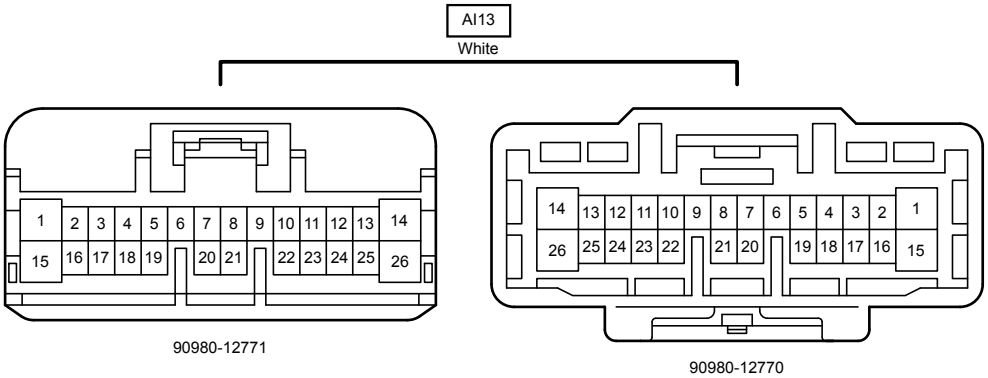
AI13
White
90980-12771
90980-12770

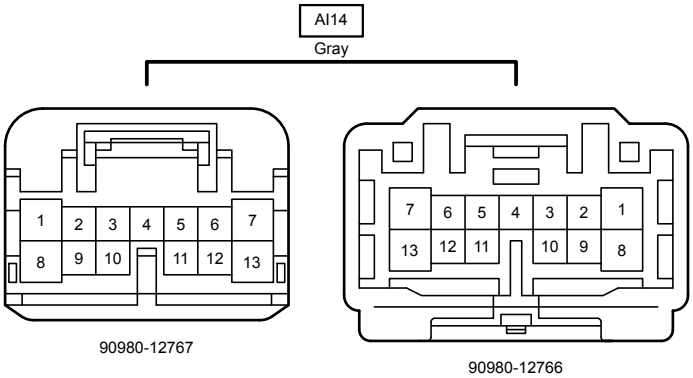
AI14
Gray
90980-12767
90980-12766

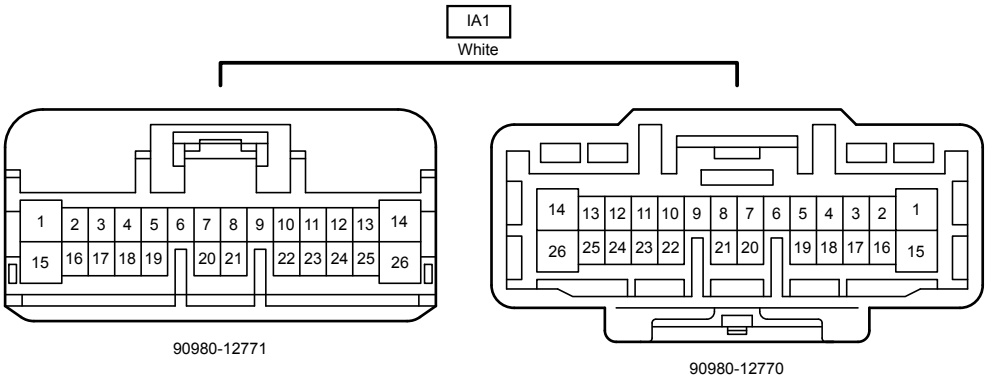
IA1
White
1 2 3 4 5 6 7 8 9 10 11 12 13 14
15 16 17 18 19 20 21 22 23 24 25 26
90980-12771
14 13 12 11 10 9 8 7 6 5 4 3 2 1
26 25 24 23 22 21 20 19 18 17 16 15
90980-12770

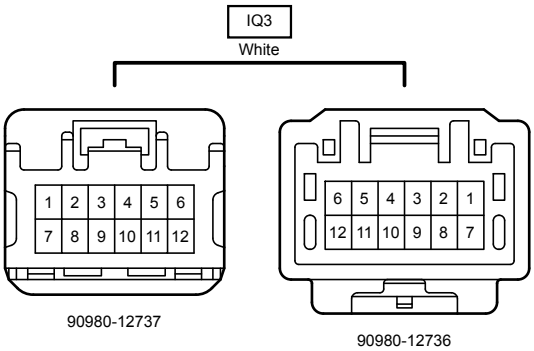
IQ3
White
1 2 3 4 5 6
7 8 9 10 11 12
90980-12737
6 5 4 3 2 1
12 11 10 9 8 7
90980-12736