(Cont. next page)

Power Source

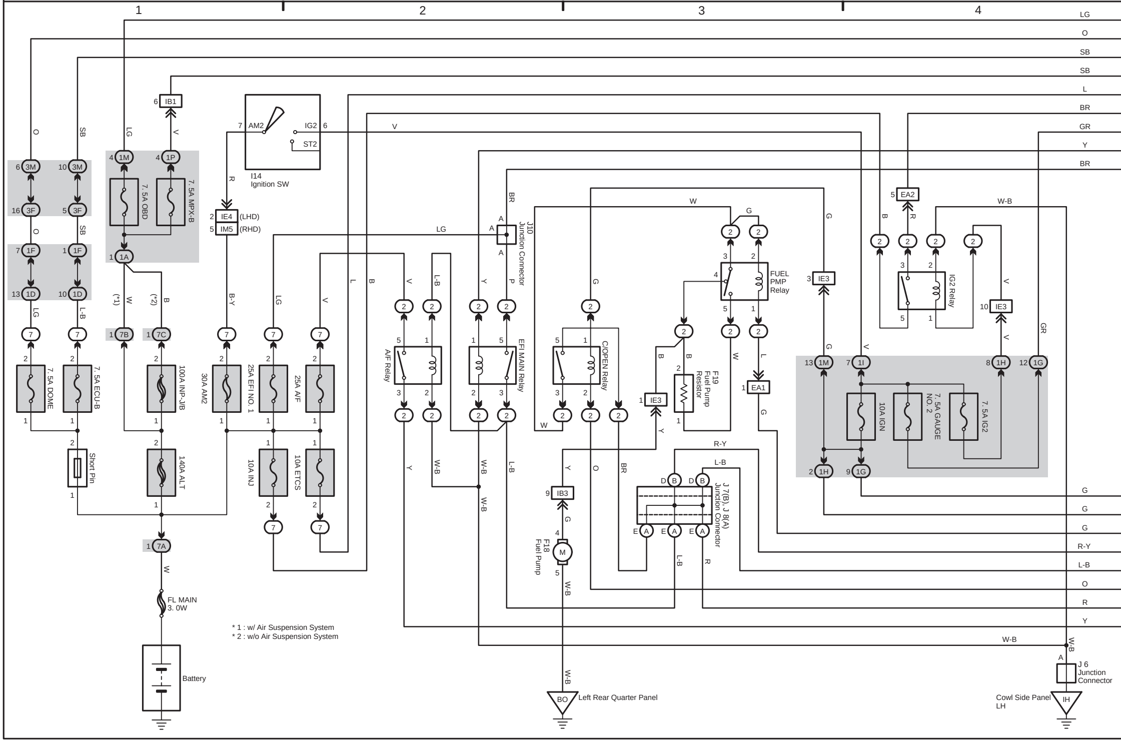
1
2
3
4
LG
O
SB
SB
L
BR
GR
Y
BR
6 IB1
V
7 AM2
IG2 6
ST2
I14
Ignition SW
R
2 IE4 (LHD)
5 IM5 (RHD)
B-Y
6 3M
10 3M
16 3F
5 3F
7 1F
1 1F
13 1D
10 1D
4 1M
4 1P
1 1A
7. 5A OBD
7. 5A MPX-B
(*1) W
(*2) B
1 7B
1 7C
7. 5A DOME
7. 5A ECU-B
100A INP-J/B
30A AM2
25A EFI NO. 1
25A A/F
Short Pin
140A ALT
10A INJ
10A ETCS
1 7A
W
FL MAIN
3. 0W
Battery
LG
A
J10
Junction Connector
BR
P
A/F Relay
EFI MAIN Relay
C/OPEN Relay
W
G
FUEL
PMP
Relay
F19
Fuel Pump
Resistor
1 IE3
9 IB3
F18
Fuel Pump
M
W-B
BO
Left Rear Quarter Panel
R-Y
L-B
J 7(B), J 8(A)
Junction Connector
1 EA1
3 IE3
5 EA2
IG2 Relay
10 IE3
13 1M
7 1I
8 1H
12 1G
10A IGN
7. 5A GAUGE
NO. 2
7. 5A IG2
2 1H
9 1G
G
G
G
R-Y
L-B
O
R
Y
W-B
J 6
Junction
Connector
Cowl Side Panel
LH
IH

* 1 : w/ Air Suspension System
* 2 : w/o Air Suspension System

Engine Immobiliser System

Engine Control

* 3 : Shielded

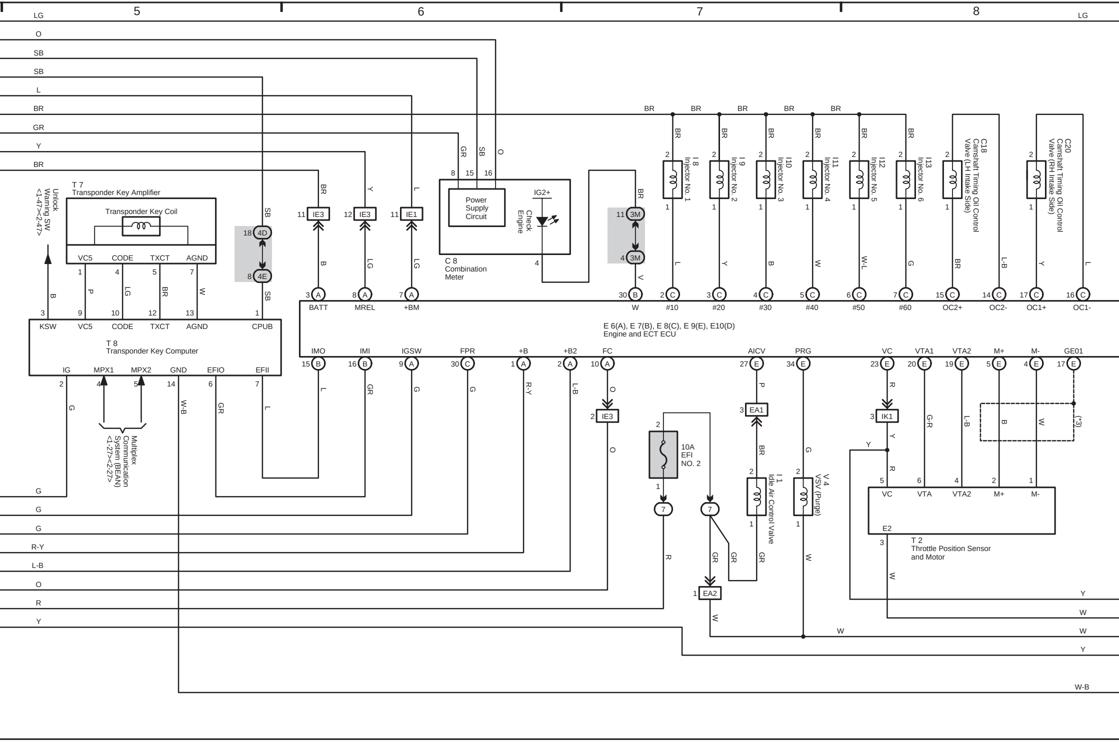
5
6
7
8
LG
O
SB
SB
L
BR
GR
Y
BR
T 7
Transponder Key Amplifier
Transponder Key Coil
VC5
CODE
TXCT
AGND
Unlock Warning SW <1-47><2-47>
T 8
Transponder Key Computer
KSW
VC5
CODE
TXCT
AGND
CPUB
IG
MPX1
MPX2
GND
EFIO
EFII
Multiplex Communication System (BEAN) <1-27><2-27>
18 4D
8 4E
11 IE3
12 IE3
11 IE1
C 8
Combination Meter
Power Supply Circuit
IG2+
Check Engine
11 3M
4 3M
BATT
MREL
+BM
W
#10
#20
#30
#40
#50
#60
OC2+
OC2-
OC1+
OC1-
E 6(A), E 7(B), E 8(C), E 9(E), E10(D)
Engine and ECT ECU
IMO
IMI
IGSW
FPR
+B
+B2
FC
AICV
PRG
VC
VTA1
VTA2
M+
M-
GE01
I 8
Injector No. 1
I 9
Injector No. 2
I10
Injector No. 3
I11
Injector No. 4
I12
Injector No. 5
I13
Injector No. 6
C18
Camshaft Timing Oil Control Valve (LH Intake Side)
C20
Camshaft Timing Oil Control Valve (RH Intake Side)
2 IE3
10A
EFI
NO. 2
3 EA1
1 EA2
I 1
Idle Air Control Valve
V 4
VSV (Purge)
3 IK1
(*3)
T 2
Throttle Position Sensor and Motor
VC
VTA
VTA2
M+
M-
E2
G
G
G
R-Y
L-B
O
R
Y
Y
W
W
Y
W-B

(Cont. next page) 5

Engine Control

* 4 : LHD From Dec. 2006 Production
* 5 : Except *4

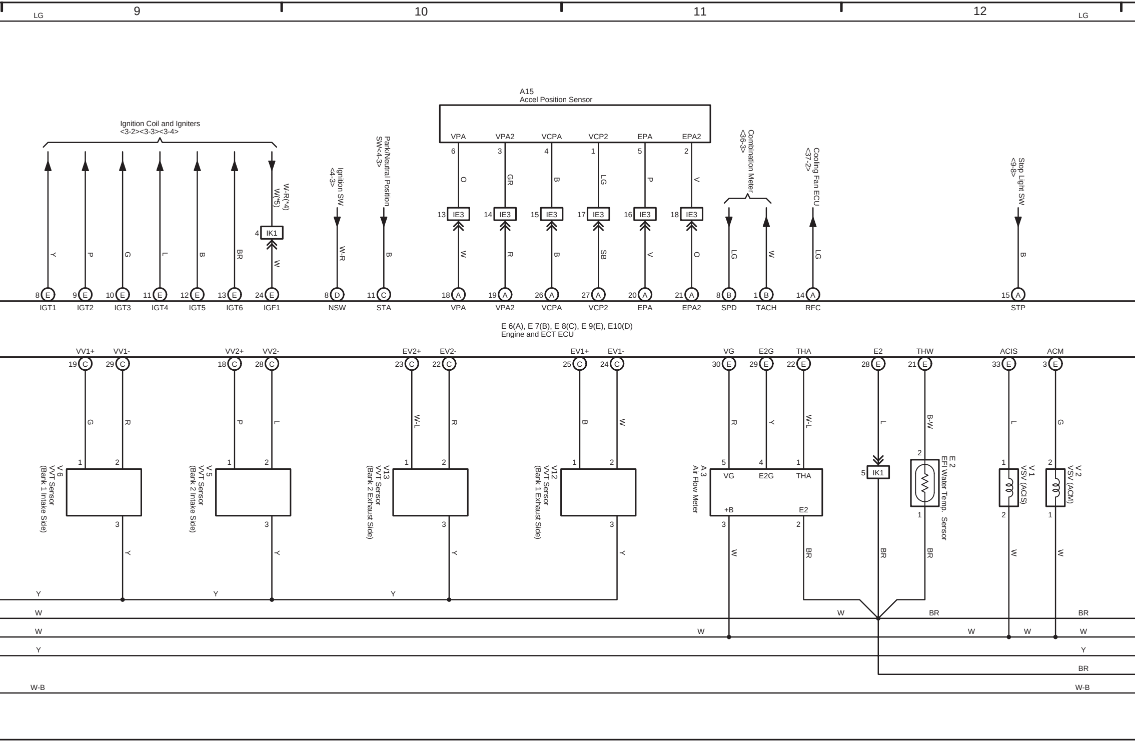
9
10
11
12
LG
Ignition Coil and Igniters <3-2><3-3><3-4>
W-R(*4)
W(*5)
IK1
Ignition SW <4-3>
Park/Neutral Position SW<4-3>
A15 Accel Position Sensor
VPA
VPA2
VCPA
VCP2
EPA
EPA2
IE3
Combination Meter <36-3>
Cooling Fan ECU <37-2>
Stop Light SW <9-8>
IGT1
IGT2
IGT3
IGT4
IGT5
IGT6
IGF1
NSW
STA
SPD
TACH
RFC
STP
E 6(A), E 7(B), E 8(C), E 9(E), E10(D)
Engine and ECT ECU
VV1+
VV1-
VV2+
VV2-
EV2+
EV2-
EV1+
EV1-
VG
E2G
THA
E2
THW
ACIS
ACM
V 6 VVT Sensor (Bank 1 Intake Side)
V 5 VVT Sensor (Bank 2 Intake Side)
V13 VVT Sensor (Bank 2 Exhaust Side)
V12 VVT Sensor (Bank 1 Exhaust Side)
A 3 Air Flow Meter
+B
E 2 EFI Water Temp. Sensor
V 1 VSV (ACIS)
V 2 VSV (ACM)
Y
W
BR
W-B

Engine Control

* 3 : Shielded

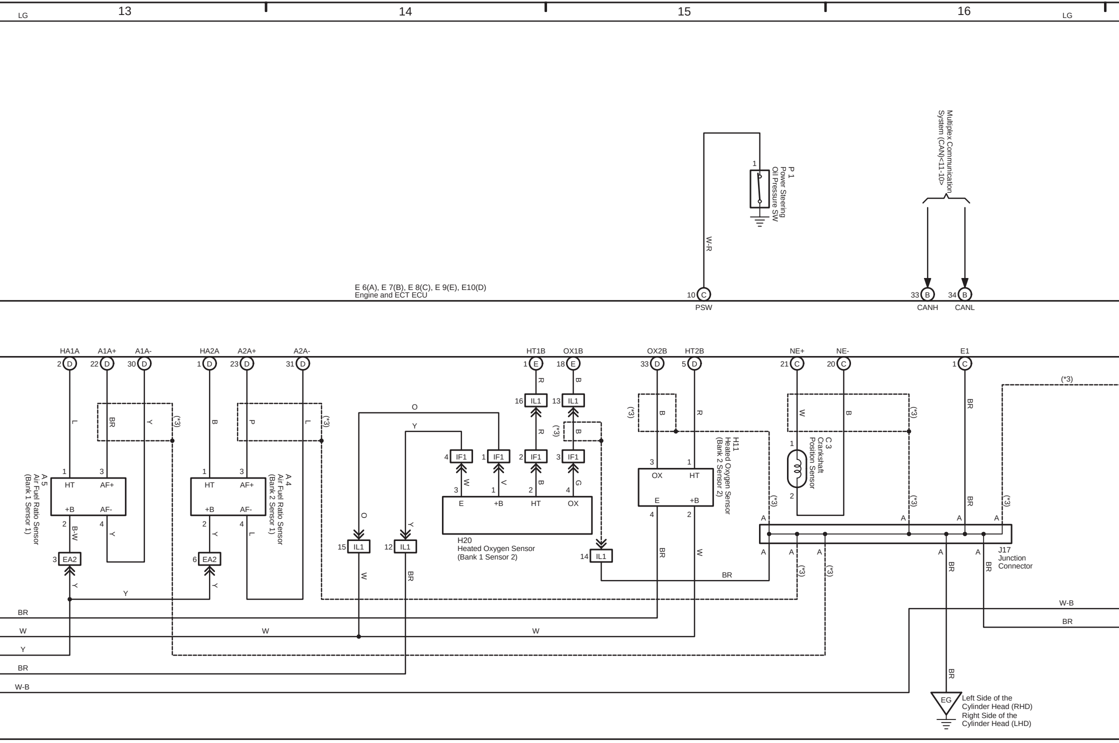
LG
13
14
15
16
LG
P 1
Power Steering
Oil Pressure SW
1
W-R
Multiplex Communication
System (CAN)<11-10>
E 6(A), E 7(B), E 8(C), E 9(E), E10(D)
Engine and ECT ECU
10 C PSW
33 B CANH
34 B CANL
HA1A 2 D
A1A+ 22 D
A1A- 30 D
HA2A 1 D
A2A+ 23 D
A2A- 31 D
HT1B 1 E
OX1B 18 E
OX2B 33 D
HT2B 5 D
NE+ 21 C
NE- 20 C
E1 1 C
A 5
Air Fuel Ratio Sensor
(Bank 1 Sensor 1)
A 4
Air Fuel Ratio Sensor
(Bank 2 Sensor 1)
HT
AF+
+B
AF-
3 EA2
6 EA2
H20
Heated Oxygen Sensor
(Bank 1 Sensor 2)
E
+B
HT
OX
4 IF1
1 IF1
2 IF1
3 IF1
16 IL1
13 IL1
15 IL1
12 IL1
14 IL1
H11
Heated Oxygen Sensor
(Bank 2 Sensor 2)
C 3
Crankshaft
Position Sensor
J17
Junction
Connector
(*3)
EG
Left Side of the
Cylinder Head (RHD)
Right Side of the
Cylinder Head (LHD)
L
BR
Y
B
P
O
W
R
G
V
B-W
W-B

RX 350 (Cont'd)

Engine Control

* 3 : Shielded

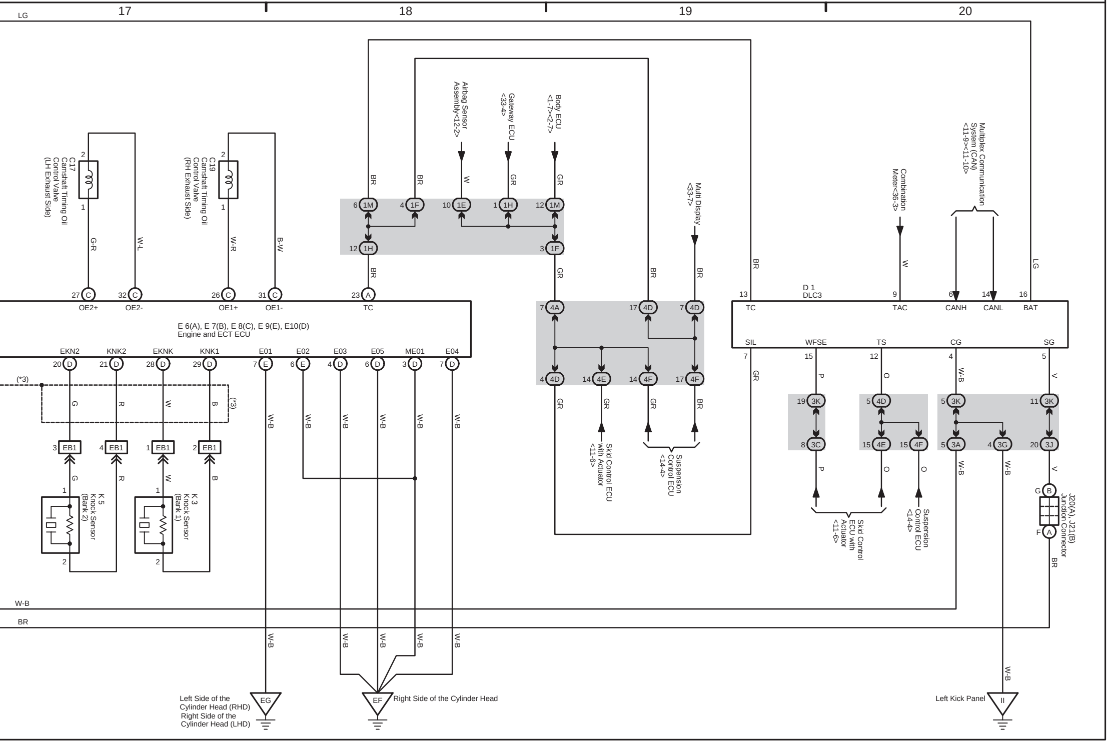
17
18
19
20
LG
C17 Camshaft Timing Oil Control Valve (LH Exhaust Side)
C19 Camshaft Timing Oil Control Valve (RH Exhaust Side)
G-R
W-L
W-R
B-W
Airbag Sensor Assembly<12-2>
Gateway ECU <33-4>
Body ECU <1-7><2-7>
Multi Display <33-7>
Combination Meter<36-3>
Multiplex Communication System (CAN) <11-9><11-10>
BR
W
GR
6 1M
4 1F
10 1E
1 1H
12 1M
12 1H
3 1F
27 C OE2+
32 C OE2-
26 C OE1+
31 C OE1-
23 A TC
E 6(A), E 7(B), E 8(C), E 9(E), E10(D) Engine and ECT ECU
EKN2 20 D
KNK2 21 D
EKNK 28 D
KNK1 29 D
E01 7 E
E02 6 E
E03 4 D
E05 6 D
ME01 3 D
E04 7 D
(*3)
3 EB1
4 EB1
1 EB1
2 EB1
K 5 Knock Sensor (Bank 2)
K 3 Knock Sensor (Bank 1)
7 4A
17 4D
7 4D
4 4D
14 4E
14 4F
17 4F
Skid Control ECU with Actuator <11-6>
Suspension Control ECU <14-4>
D 1 DLC3
13 TC
9 TAC
6 CANH
14 CANL
16 BAT
7 SIL
15 WFSE
12 TS
4 CG
5 SG
P
O
V
W-B
19 3K
8 3C
5 4D
15 4E
15 4F
5 3K
5 3A
4 3G
11 3K
20 3J
Skid Control ECU with Actuator <11-6>
Suspension Control ECU <14-4>
J20(A), J21(B) Junction Connector
G B
F A
W-B
BR
EG
Left Side of the Cylinder Head (RHD) Right Side of the Cylinder Head (LHD)
EF
Right Side of the Cylinder Head
II
Left Kick Panel