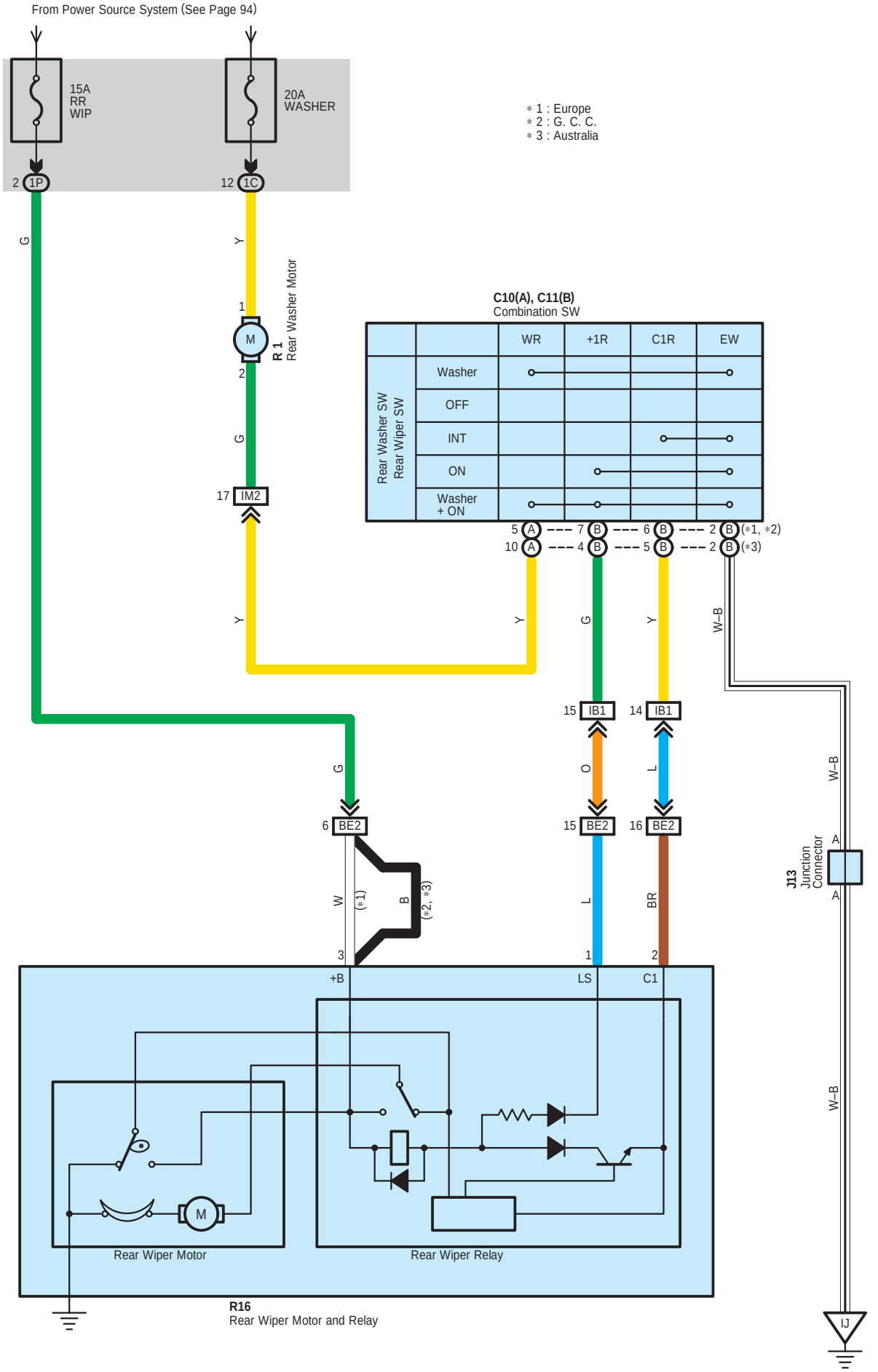
From Power Source System (See Page 94)
15A
RR
WIP
20A
WASHER
2 1P
12 1C
∗1 : Europe
∗2 : G. C. C.
∗3 : Australia
G
Y
1
M
2
R 1
Rear Washer Motor
G
17 IM2
C10(A), C11(B)
Combination SW
WR
+1R
C1R
EW
Rear Washer SW
Rear Wiper SW
Washer
OFF
INT
ON
Washer
+ ON
5 A
10 A
7 B
4 B
6 B
5 B
2 B (∗1, ∗2)
2 B (∗3)
Y
Y
G
Y
W–B
15 IB1
14 IB1
G
O
L
6 BE2
15 BE2
16 BE2
W
(∗1)
B
(∗2, ∗3)
L
BR
3
1
2
+B
LS
C1
J13
Junction
Connector
A
A
W–B
W–B
M
Rear Wiper Motor
Rear Wiper Relay
R16
Rear Wiper Motor and Relay
IJ