23 LAND CRUISER (LHD)

(Cont. next page)

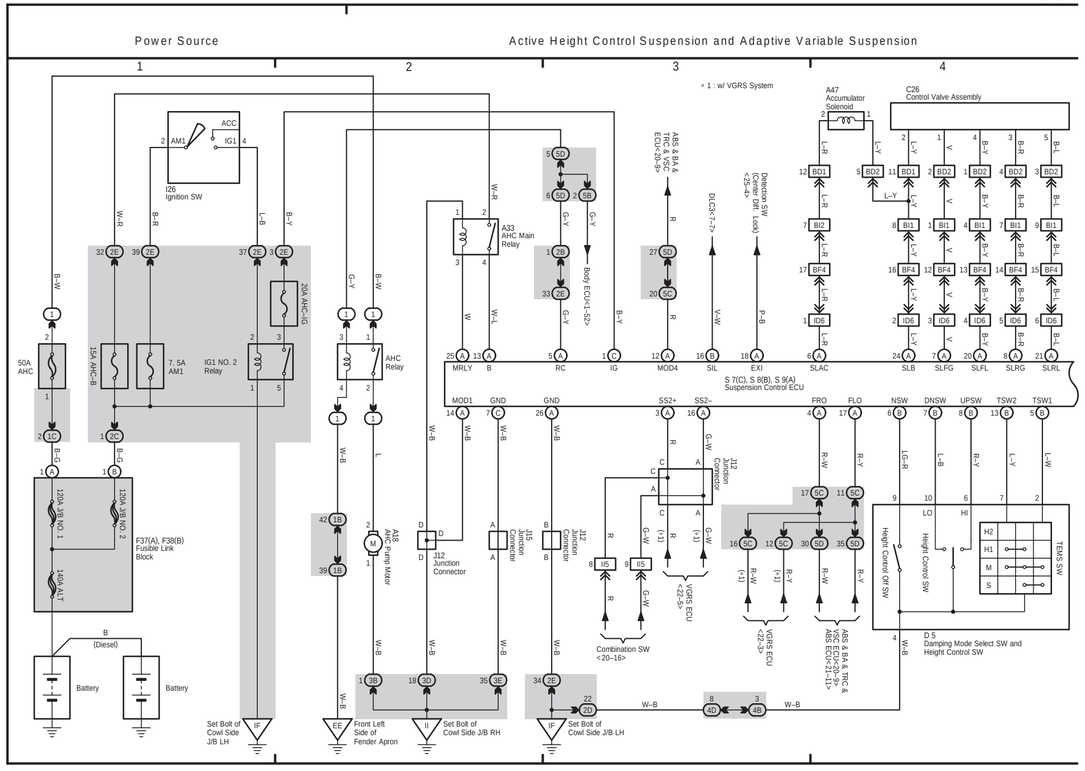
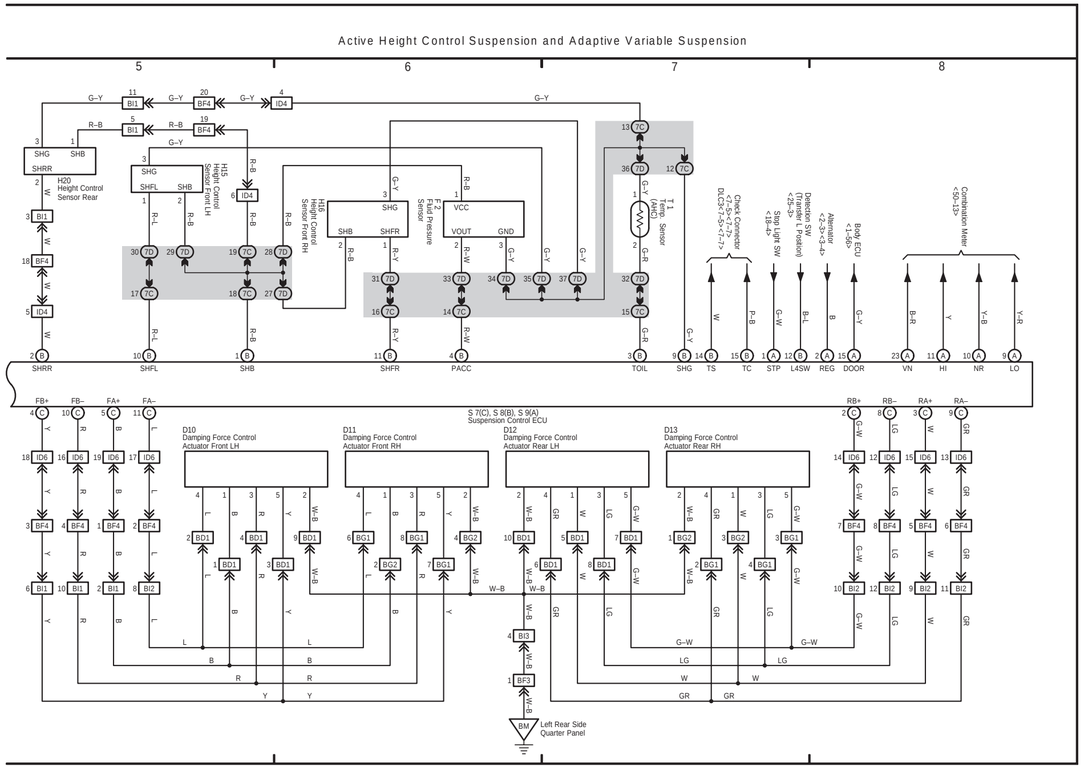
23 LAND CRUISER (LHD) (Cont' d)