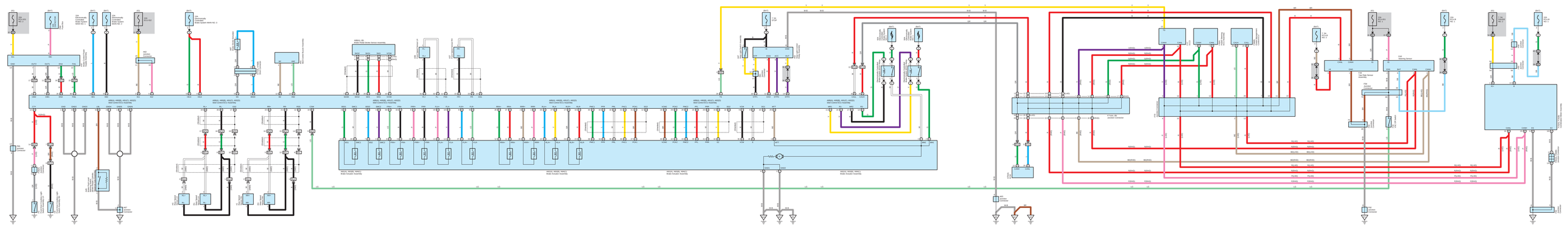
F2A
Electronically Controlled Brake System Relay No. 1
F2B
Electronically Controlled Brake System Relay No. 2
F2C
Electronically Controlled Brake System Relay No. 3
F2D
Electronically Controlled Brake System Relay No. 4
F2E
Electronically Controlled Brake System Relay No. 5
F2F
Electronically Controlled Brake System Relay No. 6
F2G
Electronically Controlled Brake System Relay No. 7
F2H
Electronically Controlled Brake System Relay No. 8
F2I
Electronically Controlled Brake System Relay No. 9
F2J
Electronically Controlled Brake System Relay No. 10
F2K
Electronically Controlled Brake System Relay No. 11
F2L
Electronically Controlled Brake System Relay No. 12
F2M
Electronically Controlled Brake System Relay No. 13
F2N
Electronically Controlled Brake System Relay No. 14
F2O
Electronically Controlled Brake System Relay No. 15
F2P
Electronically Controlled Brake System Relay No. 16
F2Q
Electronically Controlled Brake System Relay No. 17
F2R
Electronically Controlled Brake System Relay No. 18
F2S
Electronically Controlled Brake System Relay No. 19
F2T
Electronically Controlled Brake System Relay No. 20
F2U
Electronically Controlled Brake System Relay No. 21
F2V
Electronically Controlled Brake System Relay No. 22
F2W
Electronically Controlled Brake System Relay No. 23
F2X
Electronically Controlled Brake System Relay No. 24
F2Y
Electronically Controlled Brake System Relay No. 25
F2Z
Electronically Controlled Brake System Relay No. 26
F3A
Electronically Controlled Brake System Relay No. 27
F3B
Electronically Controlled Brake System Relay No. 28
F3C
Electronically Controlled Brake System Relay No. 29
F3D
Electronically Controlled Brake System Relay No. 30
F3E
Electronically Controlled Brake System Relay No. 31
F3F
Electronically Controlled Brake System Relay No. 32
F3G
Electronically Controlled Brake System Relay No. 33
F3H
Electronically Controlled Brake System Relay No. 34
F3I
Electronically Controlled Brake System Relay No. 35
F3J
Electronically Controlled Brake System Relay No. 36
F3K
Electronically Controlled Brake System Relay No. 37
F3L
Electronically Controlled Brake System Relay No. 38
F3M
Electronically Controlled Brake System Relay No. 39
F3N
Electronically Controlled Brake System Relay No. 40
F3O
Electronically Controlled Brake System Relay No. 41
F3P
Electronically Controlled Brake System Relay No. 42
F3Q
Electronically Controlled Brake System Relay No. 43
F3R
Electronically Controlled Brake System Relay No. 44
F3S
Electronically Controlled Brake System Relay No. 45
F3T
Electronically Controlled Brake System Relay No. 46
F3U
Electronically Controlled Brake System Relay No. 47
F3V
Electronically Controlled Brake System Relay No. 48
F3W
Electronically Controlled Brake System Relay No. 49
F3X
Electronically Controlled Brake System Relay No. 50
F3Y
Electronically Controlled Brake System Relay No. 51
F3Z
Electronically Controlled Brake System Relay No. 52
F4A
Electronically Controlled Brake System Relay No. 53
F4B
Electronically Controlled Brake System Relay No. 54
F4C
Electronically Controlled Brake System Relay No. 55
F4D
Electronically Controlled Brake System Relay No. 56
F4E
Electronically Controlled Brake System Relay No. 57
F4F
Electronically Controlled Brake System Relay No. 58
F4G
Electronically Controlled Brake System Relay No. 59
F4H
Electronically Controlled Brake System Relay No. 60
F4I
Electronically Controlled Brake System Relay No. 61
F4J
Electronically Controlled Brake System Relay No. 62
F4K
Electronically Controlled Brake System Relay No. 63
F4L
Electronically Controlled Brake System Relay No. 64
F4M
Electronically Controlled Brake System Relay No. 65
F4N
Electronically Controlled Brake System Relay No. 66
F4O
Electronically Controlled Brake System Relay No. 67
F4P
Electronically Controlled Brake System Relay No. 68
F4Q
Electronically Controlled Brake System Relay No. 69
F4R
Electronically Controlled Brake System Relay No. 70
F4S
Electronically Controlled Brake System Relay No. 71
F4T
Electronically Controlled Brake System Relay No. 72
F4U
Electronically Controlled Brake System Relay No. 73
F4V
Electronically Controlled Brake System Relay No. 74
F4W
Electronically Controlled Brake System Relay No. 75
F4X
Electronically Controlled Brake System Relay No. 76
F4Y
Electronically Controlled Brake System Relay No. 77
F4Z
Electronically Controlled Brake System Relay No. 78
F5A
Electronically Controlled Brake System Relay No. 79
F5B
Electronically Controlled Brake System Relay No. 80
F5C
Electronically Controlled Brake System Relay No. 81
F5D
Electronically Controlled Brake System Relay No. 82
F5E
Electronically Controlled Brake System Relay No. 83
F5F
Electronically Controlled Brake System Relay No. 84
F5G
Electronically Controlled Brake System Relay No. 85
F5H
Electronically Controlled Brake System Relay No. 86
F5I
Electronically Controlled Brake System Relay No. 87
F5J
Electronically Controlled Brake System Relay No. 88
F5K
Electronically Controlled Brake System Relay No. 89
F5L
Electronically Controlled Brake System Relay No. 90
F5M
Electronically Controlled Brake System Relay No. 91
F5N
Electronically Controlled Brake System Relay No. 92
F5O
Electronically Controlled Brake System Relay No. 93
F5P
Electronically Controlled Brake System Relay No. 94
F5Q
Electronically Controlled Brake System Relay No. 95
F5R
Electronically Controlled Brake System Relay No. 96
F5S
Electronically Controlled Brake System Relay No. 97
F5T
Electronically Controlled Brake System Relay No. 98
F5U
Electronically Controlled Brake System Relay No. 99
F5V
Electronically Controlled Brake System Relay No. 100
F5W
Electronically Controlled Brake System Relay No. 101
F5X
Electronically Controlled Brake System Relay No. 102
F5Y
Electronically Controlled Brake System Relay No. 103
F5Z
Electronically Controlled Brake System Relay No. 104
F6A
Electronically Controlled Brake System Relay No. 105
F6B
Electronically Controlled Brake System Relay No. 106
F6C
Electronically Controlled Brake System Relay No. 107
F6D
Electronically Controlled Brake System Relay No. 108
F6E
Electronically Controlled Brake System Relay No. 109
F6F
Electronically Controlled Brake System Relay No. 110
F6G
Electronically Controlled Brake System Relay No. 111
F6H
Electronically Controlled Brake System Relay No. 112
F6I
Electronically Controlled Brake System Relay No. 113
F6J
Electronically Controlled Brake System Relay No. 114
F6K
Electronically Controlled Brake System Relay No. 115
F6L
Electronically Controlled Brake System Relay No. 116
F6M
Electronically Controlled Brake System Relay No. 117
F6N
Electronically Controlled Brake System Relay No. 118
F6O
Electronically Controlled Brake System Relay No. 119
F6P
Electronically Controlled Brake System Relay No. 120
F6Q
Electronically Controlled Brake System Relay No. 121
F6R
Electronically Controlled Brake System Relay No. 122
F6S
Electronically Controlled Brake System Relay No. 123
F6T
Electronically Controlled Brake System Relay No. 124
F6U
Electronically Controlled Brake System Relay No. 125
F6V
Electronically Controlled Brake System Relay No. 126
F6W
Electronically Controlled Brake System Relay No. 127
F6X
Electronically Controlled Brake System Relay No. 128
F6Y
Electronically Controlled Brake System Relay No. 129
F6Z
Electronically Controlled Brake System Relay No. 130
F7A
Electronically Controlled Brake System Relay No. 131
F7B
Electronically Controlled Brake System Relay No. 132
F7C
Electronically Controlled Brake System Relay No. 133
F7D
Electronically Controlled Brake System Relay No. 134
F7E
Electronically Controlled Brake System Relay No. 135
F7F
Electronically Controlled Brake System Relay No. 136
F7G
Electronically Controlled Brake System Relay No. 137
F7H
Electronically Controlled Brake System Relay No. 138
F7I
Electronically Controlled Brake System Relay No. 139
F7J
Electronically Controlled Brake System Relay No. 140
F7K
Electronically Controlled Brake System Relay No. 141
F7L
Electronically Controlled Brake System Relay No. 142
F7M
Electronically Controlled Brake System Relay No. 143
F7N
Electronically Controlled Brake System Relay No. 144
F7O
Electronically Controlled Brake System Relay No. 145
F7P
Electronically Controlled Brake System Relay No. 146
F7Q
Electronically Controlled Brake System Relay No. 147
F7R
Electronically Controlled Brake System Relay No. 148
F7S
Electronically Controlled Brake System Relay No. 149
F7T
Electronically Controlled Brake System Relay No. 150
F7U
Electronically Controlled Brake System Relay No. 151
F7V
Electronically Controlled Brake System Relay No. 152
F7W
Electronically Controlled Brake System Relay No. 153
F7X
Electronically Controlled Brake System Relay No. 154
F7Y
Electronically Controlled Brake System Relay No. 155
F7Z
Electronically Controlled Brake System Relay No. 156
F8A
Electronically Controlled Brake System Relay No. 157
F8B
Electronically Controlled Brake System Relay No. 158
F8C
Electronically Controlled Brake System Relay No. 159
F8D
Electronically Controlled Brake System Relay No. 160
F8E
Electronically Controlled Brake System Relay No. 161
F8F
Electronically Controlled Brake System Relay No. 162
F8G
Electronically Controlled Brake System Relay No. 163
F8H
Electronically Controlled Brake System Relay No. 164
F8I
Electronically Controlled Brake System Relay No. 165
F8J
Electronically Controlled Brake System Relay No. 166
F8K
Electronically Controlled Brake System Relay No. 167
F8L
Electronically Controlled Brake System Relay No. 168
F8M
Electronically Controlled Brake System Relay No. 169
F8N
Electronically Controlled Brake System Relay No. 170
F8O
Electronically Controlled Brake System Relay No. 171
F8P
Electronically Controlled Brake System Relay No. 172
F8Q
Electronically Controlled Brake System Relay No. 173
F8R
Electronically Controlled Brake System Relay No. 174
F8S
Electronically Controlled Brake System Relay No. 175
F8T
Electronically Controlled Brake System Relay No. 176
F8U
Electronically Controlled Brake System Relay No. 177
F8V
Electronically Controlled Brake System Relay No. 178
F8W
Electronically Controlled Brake System Relay No. 179
F8X
Electronically Controlled Brake System Relay No. 180
F8Y
Electronically Controlled Brake System Relay No. 181
F8Z
Electronically Controlled Brake System Relay No. 182
F9A
Electronically Controlled Brake System Relay No. 183
F9B
Electronically Controlled Brake System Relay No. 184
F9C
Electronically Controlled Brake System Relay No. 185
F9D
Electronically Controlled Brake System Relay No. 186
F9E
Electronically Controlled Brake System Relay No. 187
F9F
Electronically Controlled Brake System Relay No. 188
F9G
Electronically Controlled Brake System Relay No. 189
F9H
Electronically Controlled Brake System Relay No. 190
F9I
Electronically Controlled Brake System Relay No. 191
F9J
Electronically Controlled Brake System Relay No. 192
F9K
Electronically Controlled Brake System Relay No. 193
F9L
Electronically Controlled Brake System Relay No. 194
F9M
Electronically Controlled Brake System Relay No. 195
F9N
Electronically Controlled Brake System Relay No. 196
F9O
Electronically Controlled Brake System Relay No. 197
F9P
Electronically Controlled Brake System Relay No. 198
F9Q
Electronically Controlled Brake System Relay No. 199
F9R
Electronically Controlled Brake System Relay No. 200
F9S
Electronically Controlled Brake System Relay No. 201
F9T
Electronically Controlled Brake System Relay No. 202
F9U
Electronically Controlled Brake System Relay No. 203
F9V
Electronically Controlled Brake System Relay No. 204
F9W
Electronically Controlled Brake System Relay No. 205
F9X
Electronically Controlled Brake System Relay No. 206
F9Y
Electronically Controlled Brake System Relay No. 207
F9Z
Electronically Controlled Brake System Relay No. 208
F10A
Electronically Controlled Brake System Relay No. 209
F10B
Electronically Controlled Brake System Relay No. 210
F10C
Electronically Controlled Brake System Relay No. 211
F10D
Electronically Controlled Brake System Relay No. 212
F10E
Electronically Controlled Brake System Relay No. 213
F10F
Electronically Controlled Brake System Relay No. 214
F10G
Electronically Controlled Brake System Relay No. 215
F10H
Electronically Controlled Brake System Relay No. 216
F10I
Electronically Controlled Brake System Relay No. 217
F10J
Electronically Controlled Brake System Relay No. 218
F10K
Electronically Controlled Brake System Relay No. 219
F10L
Electronically Controlled Brake System Relay No. 220
F10M
Electronically Controlled Brake System Relay No. 221
F10N
Electronically Controlled Brake System Relay No. 222
F10O
Electronically Controlled Brake System Relay No. 223
F10P
Electronically Controlled Brake System Relay No. 224
F10Q
Electronically Controlled Brake System Relay No. 225
F10R
Electronically Controlled Brake System Relay No. 226
F10S
Electronically Controlled Brake System Relay No. 227
F10T
Electronically Controlled Brake System Relay No. 228
F10U
Electronically Controlled Brake System Relay No. 229
F10V
Electronically Controlled Brake System Relay No. 230
F10W
Electronically Controlled Brake System Relay No. 231
F10X
Electronically Controlled Brake System Relay No. 232
F10Y
Electronically Controlled Brake System Relay No. 233
F10Z
Electronically Controlled Brake System Relay No. 234
F11A
Electronically Controlled Brake System Relay No. 235
F11B
Electronically Controlled Brake System Relay No. 236
F11C
Electronically Controlled Brake System Relay No. 237
F11D
Electronically Controlled Brake System Relay No. 238
F11E
Electronically Controlled Brake System Relay No. 239
F11F
Electronically Controlled Brake System Relay No. 240
F11G
Electronically Controlled Brake System Relay No. 241
F11H
Electronically Controlled Brake System Relay No. 242
F11I
Electronically Controlled Brake System Relay No. 243
F11J
Electronically Controlled Brake System Relay No. 244
F11K
Electronically Controlled Brake System Relay No. 245
F11L
Electronically Controlled Brake System Relay No. 246
F11M
Electronically Controlled Brake System Relay No. 247
F11N
Electronically Controlled Brake System Relay No. 248
F11O
Electronically Controlled Brake System Relay No. 249
F11P
Electronically Controlled Brake System Relay No. 250
F11Q
Electronically Controlled Brake System Relay No. 251
F11R
Electronically Controlled Brake System Relay No. 252
F11S
Electronically Controlled Brake System Relay No. 253
F11T
Electronically Controlled Brake System Relay No. 254
F11U
Electronically Controlled Brake System Relay No. 255
F11V
Electronically Controlled Brake System Relay No. 256
F11W
Electronically Controlled Brake System Relay No. 257
F11X
Electronically Controlled Brake System Relay No. 258
F11Y
Electronically Controlled Brake System Relay No. 259
F11Z
Electronically Controlled Brake System Relay No. 260
F12A
Electronically Controlled Brake System Relay No. 261
F12B
Electronically Controlled Brake System Relay No. 262
F12C
Electronically Controlled Brake System Relay No. 263
F12D
Electronically Controlled Brake System Relay No. 264
F12E
Electronically Controlled Brake System Relay No. 265
F12F
Electronically Controlled Brake System Relay No. 266
F12G
Electronically Controlled Brake System Relay No. 267
F12H
Electronically Controlled Brake System Relay No. 268
F12I
Electronically Controlled Brake System Relay No. 269
F12J
Electronically Controlled Brake System Relay No. 270
F12K
Electronically Controlled Brake System Relay No. 271
F12L
Electronically Controlled Brake System Relay No. 272
F12M
Electronically Controlled Brake System Relay No. 273
F12N
Electronically Controlled Brake System Relay No. 274
F12O
Electronically Controlled Brake System Relay No. 275
F12P
Electronically Controlled Brake System Relay No. 276
F12Q
Electronically Controlled Brake System Relay No. 277
F12R
Electronically Controlled Brake System Relay No. 278
F12S
Electronically Controlled Brake System Relay No. 279
F12T
Electronically Controlled Brake System Relay No. 280
F12U
Electronically Controlled Brake System Relay No. 281
F12V
Electronically Controlled Brake System Relay No. 282
F12W
Electronically Controlled Brake System Relay No. 283
F12X
Electronically Controlled Brake System Relay No. 284
F12Y
Electronically Controlled Brake System Relay No. 285
F12Z
Electronically Controlled Brake System Relay No. 286
F13A
Electronically Controlled Brake System Relay No. 287
F13B
Electronically Controlled Brake System Relay No. 288
F13C
Electronically Controlled Brake System Relay No. 289
F13D
Electronically Controlled Brake System Relay No. 290
F13E
Electronically Controlled Brake System Relay No. 291
F13F
Electronically Controlled Brake System Relay No. 292
F13G
Electronically Controlled Brake System Relay No. 293
F13H
Electronically Controlled Brake System Relay No. 294
F13I
Electronically Controlled Brake System Relay No. 295
F13J
Electronically Controlled Brake System Relay No. 296
F13K
Electronically Controlled Brake System Relay No. 297
F13L
Electronically Controlled Brake System Relay No. 298
F13M
Electronically Controlled Brake System Relay No. 299
F13N
Electronically Controlled Brake System Relay No. 300
F13O
Electronically Controlled Brake System Relay No. 301
F13P
Electronically Controlled Brake System Relay No. 302
F13Q
Electronically Controlled Brake System Relay No. 303
F13R
Electronically Controlled Brake System Relay No. 304
F13S
Electronically Controlled Brake System Relay No. 305
F13T
Electronically Controlled Brake System Relay No. 306
F13U
Electronically Controlled Brake System Relay No. 307
F13V
Electronically Controlled Brake System Relay No. 308
F13W
Electronically Controlled Brake System Relay No. 309
F13X
Electronically Controlled Brake System Relay No. 310
F13Y
Electronically Controlled Brake System Relay No. 311
F13Z
Electronically Controlled Brake System Relay No. 312
F14A
Electronically Controlled Brake System Relay No. 313
F14B
Electronically Controlled Brake System Relay No. 314
F14C
Electronically Controlled Brake System Relay No. 315
F14D
Electronically Controlled Brake System Relay No. 316
F14E
Electronically Controlled Brake System Relay No. 317
F14F
Electronically Controlled Brake System Relay No. 318
F14G
Electronically Controlled Brake System Relay No. 319
F14H
Electronically Controlled Brake System Relay No. 320
F14I
Electronically Controlled Brake System Relay No. 321
F14J
Electronically Controlled Brake System Relay No. 322
F14K
Electronically Controlled Brake System Relay No. 323
F14L
Electronically Controlled Brake System Relay No. 324
F14M
Electronically Controlled Brake System Relay No. 325
F14N
Electronically Controlled Brake System Relay No. 326
F14O
Electronically Controlled Brake System Relay No. 327
F14P
Electronically Controlled Brake System Relay No. 328
F14Q
Electronically Controlled Brake System Relay No. 329
F14R
Electronically Controlled Brake System Relay No. 330
F14S
Electronically Controlled Brake System Relay No. 331
F14T
Electronically Controlled Brake System Relay No. 332
F14U
Electronically Controlled Brake System Relay No. 333
F14V
Electronically Controlled Brake System Relay No. 334
F14W
Electronically Controlled Brake System Relay No. 335
F14X
Electronically Controlled Brake System Relay No. 336
F14Y
Electronically Controlled Brake System Relay No. 337
F14Z
Electronically Controlled Brake System Relay No. 338
F15A
Electronically Controlled Brake System Relay No. 339
F15B
Electronically Controlled Brake System Relay No. 340
F15C
Electronically Controlled Brake System Relay No. 341
F15D
Electronically Controlled Brake System Relay No. 342
F15E
Electronically Controlled Brake System Relay No. 343
F15F
Electronically Controlled Brake System Relay No. 344
F15G
Electronically Controlled Brake System Relay No. 345
F15H
Electronically Controlled Brake System Relay No. 346
F15I
Electronically Controlled Brake System Relay No. 347
F15J
Electronically Controlled Brake System Relay No. 348
F15K
Electronically Controlled Brake System Relay No. 349
F15L
Electronically Controlled Brake System Relay No. 350
F15M
Electronically Controlled Brake System Relay No. 351
F15N
Electronically Controlled Brake System Relay No. 352
F15O
Electronically Controlled Brake System Relay No. 353
F15P
Electronically Controlled Brake System Relay No. 354
F15Q
Electronically Controlled Brake System Relay No. 355
F15R
Electronically Controlled Brake System Relay No. 356
F15S
Electronically Controlled Brake System Relay No. 357
F15T
Electronically Controlled Brake System Relay No. 358
F15U
Electronically Controlled Brake System Relay No. 359
F15V
Electronically Controlled Brake System Relay No. 360
F15W
Electronically Controlled Brake System Relay No. 361
F15X
Electronically Controlled Brake System Relay No. 362
F15Y
Electronically Controlled Brake System Relay No. 363
F15Z
Electronically Controlled Brake System Relay No. 364
F16A
Electronically Controlled Brake System Relay No. 365
F16B
Electronically Controlled Brake System Relay No. 366
F16C
Electronically Controlled Brake System Relay No. 367
F16D
Electronically Controlled Brake System Relay No. 368
F16E
Electronically Controlled Brake System Relay No. 369
F16F
Electronically Controlled Brake System Relay No. 370
F16G
Electronically Controlled Brake System Relay No. 371
F16H
Electronically Controlled Brake System Relay No. 372
F16I
Electronically Controlled Brake System Relay No. 373
F16J
Electronically Controlled Brake System Relay No. 374
F16K
Electronically Controlled Brake System Relay No. 375
F16L
Electronically Controlled Brake System Relay No. 376
F16M
Electronically Controlled Brake System Relay No. 377
F16N
Electronically Controlled Brake System Relay No. 378
F16O
Electronically Controlled Brake System Relay No. 379
F16P
Electronically Controlled Brake System Relay No. 380
F16Q
Electronically Controlled Brake System Relay No. 381
F16R
Electronically Controlled Brake System Relay No. 382
F16S
Electronically Controlled Brake System Relay No. 383
F16T
Electronically Controlled Brake System Relay No. 384
F16U
Electronically Controlled Brake System Relay No. 385
F16V
Electronically Controlled Brake System Relay No. 386
F16W
Electronically Controlled Brake System Relay No. 387
F16X
Electronically Controlled Brake System Relay No. 388
F16Y
Electronically Controlled Brake System Relay No. 389
F16Z
Electronically Controlled Brake System Relay No. 390
F17A
Electronically Controlled Brake System Relay No. 391
F17B
Electronically Controlled Brake System Relay No. 392
F17C
Electronically Controlled Brake System Relay No. 393
F17D
Electronically Controlled Brake System Relay No. 394
F17E
Electronically Controlled Brake System Relay No. 395
F17F
Electronically Controlled Brake System Relay No. 396
F17G
Electronically Controlled Brake System Relay No. 397
F17H
Electronically Controlled Brake System Relay No. 398
F17I
Electronically Controlled Brake System Relay No. 399
F17J
Electronically Controlled Brake System Relay No. 400
F17K
Electronically Controlled Brake System Relay No. 401
F17L
Electronically Controlled Brake System Relay No. 402
F17M
Electronically Controlled Brake System Relay No. 403
F17N
Electronically Controlled Brake System Relay No. 404
F17O
Electronically Controlled Brake System Relay No. 405
F17P
Electronically Controlled Brake System Relay No. 406
F17Q
Electronically Controlled Brake System Relay No. 407
F17R
Electronically Controlled Brake System Relay No. 408
F17S
Electronically Controlled Brake System Relay No. 409
F17T
Electronically Controlled Brake System Relay No. 410
F17U
Electronically Controlled Brake System Relay No. 411
F17V
Electronically Controlled Brake System Relay No. 412
F17W
Electronically Controlled Brake System Relay No. 413
F17X
Electronically Controlled Brake System Relay No. 414
F17Y
Electronically Controlled Brake System Relay No. 415
F17Z
Electronically Controlled Brake System Relay No. 416
F18A
Electronically Controlled Brake System Relay No. 417
F18B
Electronically Controlled Brake System Relay No. 418
F18C
Electronically Controlled Brake System Relay No. 419
F18D
Electronically Controlled Brake System Relay No. 420
F18E
Electronically Controlled Brake System Relay No. 421
F18F
Electronically Controlled Brake System Relay No. 422
F18G
Electronically Controlled Brake System Relay No. 423
F18H
Electronically Controlled Brake System Relay No. 424
F18I
Electronically Controlled Brake System Relay No. 425
F18J
Electronically Controlled Brake System Relay No. 426
F18K
Electronically Controlled Brake System Relay No. 427
F18L
Electronically Controlled Brake System Relay No. 428
F18M
Electronically Controlled Brake System Relay No. 429
F18N
Electronically Controlled Brake System Relay No. 430
F18O
Electronically Controlled Brake System Relay No. 431
F18P
Electronically Controlled Brake System Relay No. 432
F18Q
Electronically Controlled Brake System Relay No. 433
F18R
Electronically Controlled Brake System Relay No. 434
F18S
Electronically Controlled Brake System Relay No. 435
F18T
Electronically Controlled Brake System Relay No. 436
F18U
Electronically Controlled Brake System Relay No. 437
F18V
Electronically Controlled Brake System Relay No. 438
F18W
Electronically Controlled Brake System Relay No. 439
F18X
Electronically Controlled Brake System Relay No. 440
F18Y
Electronically Controlled Brake System Relay No. 441
F18Z
Electronically Controlled Brake System Relay No. 442
F19A
Electronically Controlled Brake System Relay No. 443
F19B
Electronically Controlled Brake System Relay No. 444
F19C
Electronically Controlled Brake System Relay No. 445
F19D
Electronically Controlled Brake System Relay No. 446
F19E
Electronically Controlled Brake System Relay No. 447
F19F
Electronically Controlled Brake System Relay No. 448
F19G
Electronically Controlled Brake System Relay No. 449
F19H
Electronically Controlled Brake System Relay No. 450
F19I
Electronically Controlled Brake System Relay No. 451
F19J
Electronically Controlled Brake System Relay No. 452
F19K
Electronically Controlled Brake System Relay No. 453
F19L
Electronically Controlled Brake System Relay No. 454
F19M
Electronically Controlled Brake System Relay No. 455
F19N
Electronically Controlled Brake System Relay No. 456
F19O
Electronically Controlled Brake System Relay No. 457
F19P
Electronically Controlled Brake System Relay No. 458
F19Q
Electronically Controlled Brake System Relay No. 459
F19R
Electronically Controlled Brake System Relay No. 460
F19S
Electronically Controlled Brake System Relay No. 461
F19T
Electronically Controlled Brake System Relay No. 462
F19U
Electronically Controlled Brake System Relay No. 463
F19V
Electronically Controlled Brake System Relay No. 464
F19W
Electronically Controlled Brake System Relay No. 465
F19X
Electronically Controlled Brake System Relay No. 466
F19Y
Electronically Controlled Brake System Relay No. 467
F19Z
Electronically Controlled Brake System Relay No. 468
F20A
Electronically Controlled Brake System Relay No. 469
F20B
Electronically Controlled Brake System Relay No. 470
F20C
Electronically Controlled Brake System Relay No. 471
F20D
Electronically Controlled Brake System Relay No. 472
F20E
Electronically Controlled Brake System Relay No. 473
F20F
Electronically Controlled Brake System Relay No. 474
F20G
Electronically Controlled Brake System Relay No. 475
F20H
Electronically Controlled Brake System Relay No. 476
F20I
Electronically Controlled Brake System Relay No. 477
F20J
Electronically Controlled Brake System Relay No. 478
F20K
Electronically Controlled Brake System Relay No. 479
F20L
Electronically Controlled Brake System Relay No. 480
F20M
Electronically Controlled Brake System Relay No. 481
F20N
Electronically Controlled Brake System Relay No. 482
F20O
Electronically Controlled Brake System Relay No. 483
F20P
Electronically Controlled Brake System Relay No. 484
F20Q
Electronically Controlled Brake System Relay No. 485
F20R
Electronically Controlled Brake System Relay No. 486
F20S
Electronically Controlled Brake System Relay No. 487
F20T
Electronically Controlled Brake System Relay No. 488
F20U
Electronically Controlled Brake System Relay No. 489
F20V
Electronically Controlled Brake System Relay No. 490
F20W
Electronically Controlled Brake System Relay No. 491
F20X
Electronically Controlled Brake System Relay No. 492
F20Y
Electronically Controlled Brake System Relay No. 493
F20Z
Electronically Controlled Brake System Relay No. 494
F21A
Electronically Controlled Brake System Relay No. 495
F21B
Electronically Controlled Brake System Relay No. 496
F21C
Electronically Controlled Brake System Relay No. 497
F21D
Electronically Controlled Brake System Relay No. 498
F21E
Electronically Controlled Brake System Relay No. 499
F21F
Electronically Controlled Brake System Relay No. 500
F21G
Electronically Controlled Brake System Relay No. 501
F21H
Electronically Controlled Brake System Relay No. 502
F21I
Electronically Controlled Brake System Relay No. 503
F21J
Electronically Controlled Brake System Relay No. 504
F21K
Electronically Controlled Brake System Relay No. 505
F21L
Electronically Controlled Brake System Relay No. 506
F21M
Electronically Controlled Brake System Relay No. 507
F21N
Electronically Controlled Brake System Relay No. 508
F21O
Electronically Controlled Brake System Relay No. 509
F21P
Electronically Controlled Brake System Relay No. 510
F21Q
Electronically Controlled Brake System Relay No. 511
F21R
Electronically Controlled Brake System Relay No. 512
F21S
Electronically Controlled Brake System Relay No. 513
F21T
Electronically Controlled Brake System Relay No. 514
F21U
Electronically Controlled Brake System Relay No. 515
F21V
Electronically Controlled Brake System Relay No. 516
F21W
Electronically Controlled Brake System Relay No. 517
F21X
Electronically Controlled Brake System Relay No. 518
F21Y
Electronically Controlled Brake System Relay No. 519
F21Z
Electronically Controlled Brake System Relay No. 520
F22A
Electronically Controlled Brake System Relay No. 521
F22B
Electronically Controlled Brake System Relay No. 522
F22C
Electronically Controlled Brake System Relay No. 523
F22D
Electronically Controlled Brake System Relay No. 524
F22E
Electronically Controlled Brake System Relay No. 525
F22F
Electronically Controlled Brake System Relay No. 526
F22G
Electronically Controlled Brake System Relay No. 527
F22H
Electronically Controlled Brake System Relay No. 528
F22I
Electronically Controlled Brake System Relay No. 529
F22J
Electronically Controlled Brake System Relay No. 530
F22K
Electronically Controlled Brake System Relay No. 531
F22L
Electronically Controlled Brake System Relay No. 532
F22M
Electronically Controlled Brake System Relay No. 533
F22N
Electronically Controlled Brake System Relay No. 534
F22O
Electronically Controlled Brake System Relay No. 535
F22P
Electronically Controlled Brake System Relay No. 536
F22Q
Electronically Controlled Brake System Relay No. 537
F22R
Electronically Controlled Brake System Relay No. 538
F22S
Electronically Controlled Brake System Relay No. 539
F22T
Electronically Controlled Brake System Relay No. 540
F22U
Electronically Controlled Brake System Relay No. 541
F22V
Electronically Controlled Brake System Relay No. 542
F22W
Electronically Controlled Brake System Relay No. 543
F22X
Electronically Controlled Brake System Relay No. 544
F22Y
Electronically Controlled Brake System Relay No. 545
F22Z
Electronically Controlled Brake System Relay No. 546
F23A
Electronically Controlled Brake System Relay No. 547
F23B
Electronically Controlled Brake System Relay No. 548
F23C
Electronically Controlled Brake System Relay No. 549
F23D
Electronically Controlled Brake System Relay No. 550
F23E
Electronically Controlled Brake System Relay No. 551
F23F
Electronically Controlled Brake System Relay No. 552
F23G
Electronically Controlled Brake System Relay No. 553
F23H
Electronically Controlled Brake System Relay No. 554
F23I
Electronically Controlled Brake System Relay No. 555
F23J
Electronically Controlled Brake System Relay No. 556
F23K
Electronically Controlled Brake System Relay No. 557
F23L
Electronically Controlled Brake System Relay No. 558
F23M
Electronically Controlled Brake System Relay No. 559
F23N
Electronically Controlled Brake System Relay No. 560
F23O
Electronically Controlled Brake System Relay No. 561
F23P
Electronically Controlled Brake System Relay No. 562
F23Q
Electronically Controlled Brake System Relay No. 563
F23R
Electronically Controlled Brake System Relay No. 564
F23S
Electronically Controlled Brake System Relay No. 565
F23T
Electronically Controlled Brake System Relay No. 566
F23U
Electronically Controlled Brake System Relay No. 567
F23V
Electronically Controlled Brake System Relay No. 568
F23W
Electronically Controlled Brake System Relay No. 569
F23X
Electronically Controlled Brake System Relay No. 570
F23Y
Electronically Controlled Brake System Relay No. 571
F23Z
Electronically Controlled Brake System Relay No. 572
F24A
Electronically Controlled Brake System Relay No. 573
F24B
Electronically Controlled Brake System Relay No. 574
F24C
Electronically Controlled Brake System Relay No. 575
F24D
Electronically Controlled Brake System Relay No. 576
F24E
Electronically Controlled Brake System Relay No. 577
F24F
Electronically Controlled Brake System Relay No. 578
F24G
Electronically Controlled Brake System Relay No. 579
F24H
Electronically Controlled Brake System Relay No. 580
F24I
Electronically Controlled Brake System Relay No. 581
F24J
Electronically Controlled Brake System Relay No. 582
F24K
Electronically Controlled Brake System Relay No. 583
F24L
Electronically Controlled Brake System Relay No. 584
F24M
Electronically Controlled Brake System Relay No. 585
F24N
Electronically Controlled Brake System Relay No. 586
F24O
Electronically Controlled Brake System Relay No. 587
F24P
Electronically Controlled Brake System Relay No. 588
F24Q
Electronically Controlled Brake System Relay No. 589
F24R
Electronically Controlled Brake System Relay No. 590
F24S
Electronically Controlled Brake System Relay No. 591
F24T
Electronically Controlled Brake System Relay No. 592
F24U
Electronically Controlled Brake System Relay No. 593
F24V
Electronically Controlled Brake System Relay No. 594
F24W
Electronically Controlled Brake System Relay No. 595
F24X
Electronically Controlled Brake System Relay No. 596
F24Y
Electronically Controlled Brake System Relay No. 597
F24Z
Electronically Controlled Brake System Relay No. 598
F25A
Electronically Controlled Brake System Relay No. 599
F25B
Electronically Controlled Brake System Relay No. 600
F25C
Electronically Controlled Brake System Relay No. 601
F25D
Electronically Controlled Brake System Relay No. 602
F25E
Electronically Controlled Brake System Relay No. 603
F25F
Electronically Controlled Brake System Relay No. 604
F25G
Electronically Controlled Brake System Relay No. 605
F25H
Electronically Controlled Brake System Relay No. 606
F25I
Electronically Controlled Brake System Relay No. 607
F25J
Electronically Controlled Brake System Relay No. 608
F25K
Electronically Controlled Brake System Relay No. 609
F25L
Electronically Controlled Brake System Relay No. 610
F25M
Electronically Controlled Brake System Relay No. 611
F25N
Electronically Controlled Brake System Relay No. 612
F25O
Electronically Controlled Brake System Relay No. 613
F25P
Electronically Controlled Brake System Relay No. 614
F25Q
Electronically Controlled Brake System Relay No. 615
F25R
Electronically Controlled Brake System Relay No. 616
F25S
Electronically Controlled Brake System Relay No. 617
F25T
Electronically Controlled Brake System Relay No. 618
F25U
Electronically Controlled Brake System Relay No. 619
F25V
Electronically Controlled Brake System Relay No. 620
F25W
Electronically Controlled Brake System Relay No. 621
F25X
Electronically Controlled Brake System Relay No. 622
F25Y
Electronically Controlled Brake System Relay No. 623
F25Z
Electronically Controlled Brake System Relay No. 624
F26A
Electronically Controlled Brake System Relay No. 625
F26B
Electronically Controlled Brake System Relay No. 626
F26C
Electronically Controlled Brake System Relay No. 627
F26D
Electronically Controlled Brake System Relay No. 628
F26E
Electronically Controlled Brake System Relay No. 629
F26F
Electronically Controlled Brake System Relay No. 630
F26G
Electronically Controlled Brake System Relay No. 631
F26H
Electronically Controlled Brake System Relay No. 632
F26I
Electronically Controlled Brake System Relay No. 633
F26J
Electronically Controlled Brake System Relay No. 634
F26K
Electronically Controlled Brake System Relay No. 635
F26L
Electronically Controlled Brake System Relay No. 636
F26M
Electronically Controlled Brake System Relay No. 637
F26N
Electronically Controlled Brake System Relay No. 638
F26O
Electronically Controlled Brake System Relay No. 639
F26P
Electronically Controlled Brake System Relay No. 640
F26Q
Electronically Controlled Brake System Relay No. 641
F26R
Electronically Controlled Brake System Relay No. 642
F26S
Electronically Controlled Brake System Relay No. 643
F26T
Electronically Controlled Brake System Relay No. 644
F26U
Electronically Controlled Brake System Relay No. 645
F26V
Electronically Controlled Brake System Relay No. 646
F26W
Electronically Controlled Brake System Relay No. 647
F26X
Electronically Controlled Brake System Relay No. 648
F26Y
Electronically Controlled Brake System Relay No. 649
F26Z
Electronically Controlled Brake System Relay No. 650
F27A
Electronically Controlled Brake System Relay No. 651
F27B
Electronically Controlled Brake System Relay No. 652
F27C
Electronically Controlled Brake System Relay No. 653
F27D
Electronically Controlled Brake System Relay No. 654
F27E
Electronically Controlled Brake System Relay No. 655
F27F
Electronically Controlled Brake System Relay No. 656
F27G
Electronically Controlled Brake System Relay No. 657
F27H
Electronically Controlled Brake System Relay No. 658
F27I
Electronically Controlled Brake System Relay No. 659
F27J
Electronically Controlled Brake System Relay No. 660
F27K
Electronically Controlled Brake System