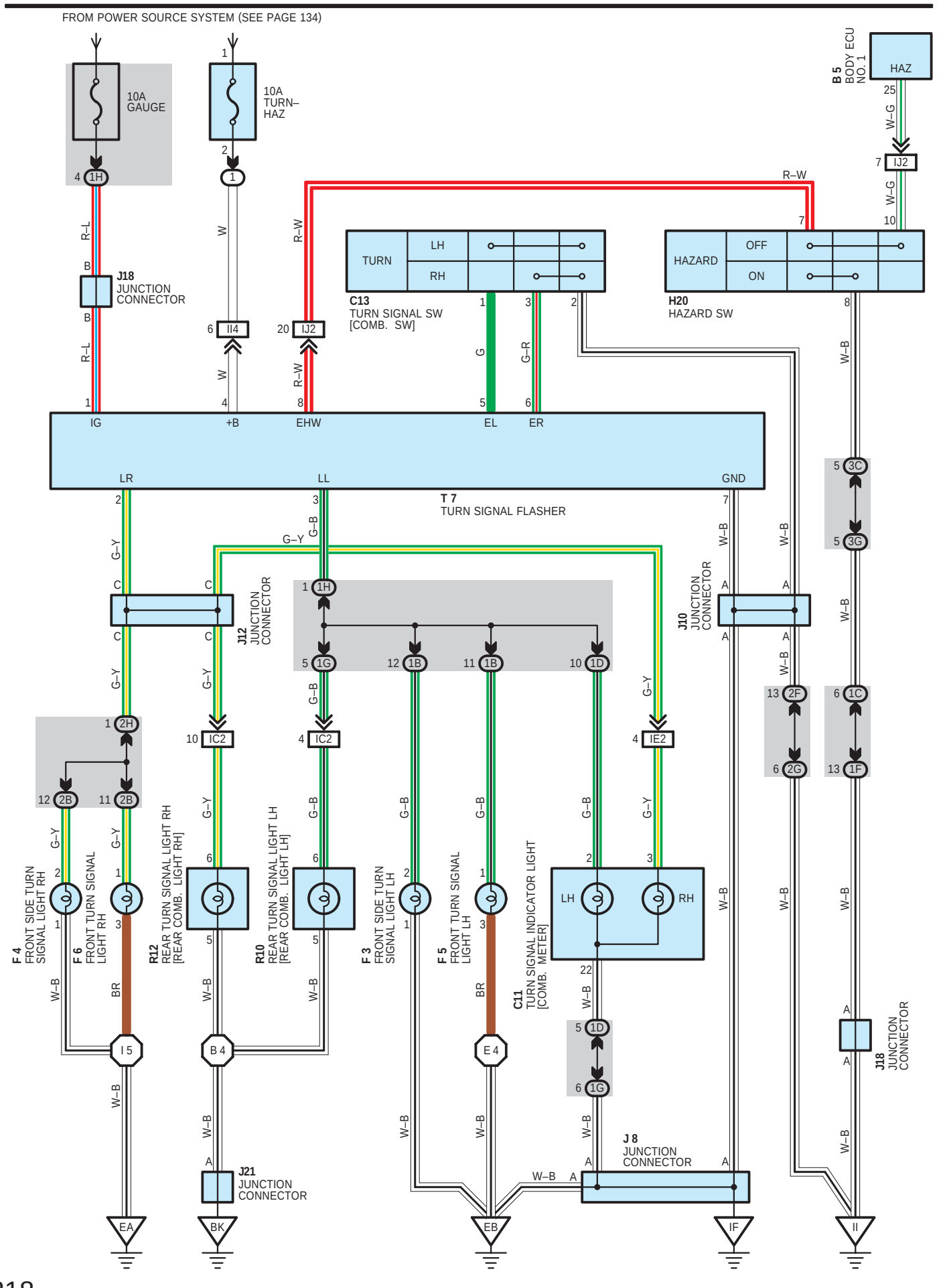TURN SIGNAL AND HAZARD WARNING LIGHT (LHD)