Moon Roof

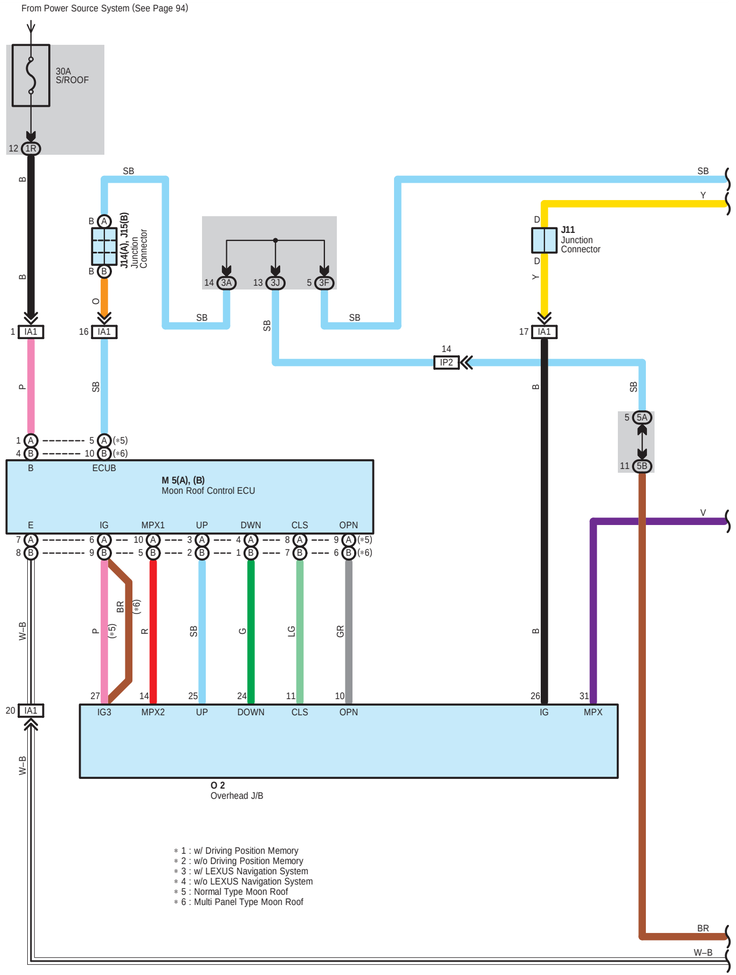

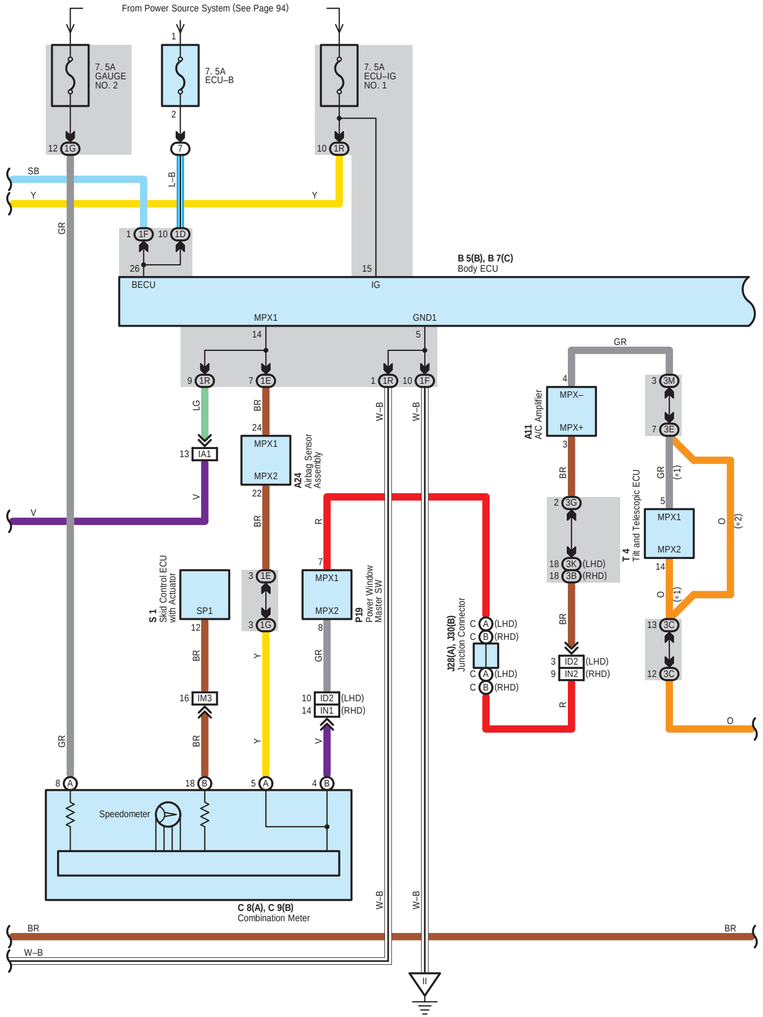
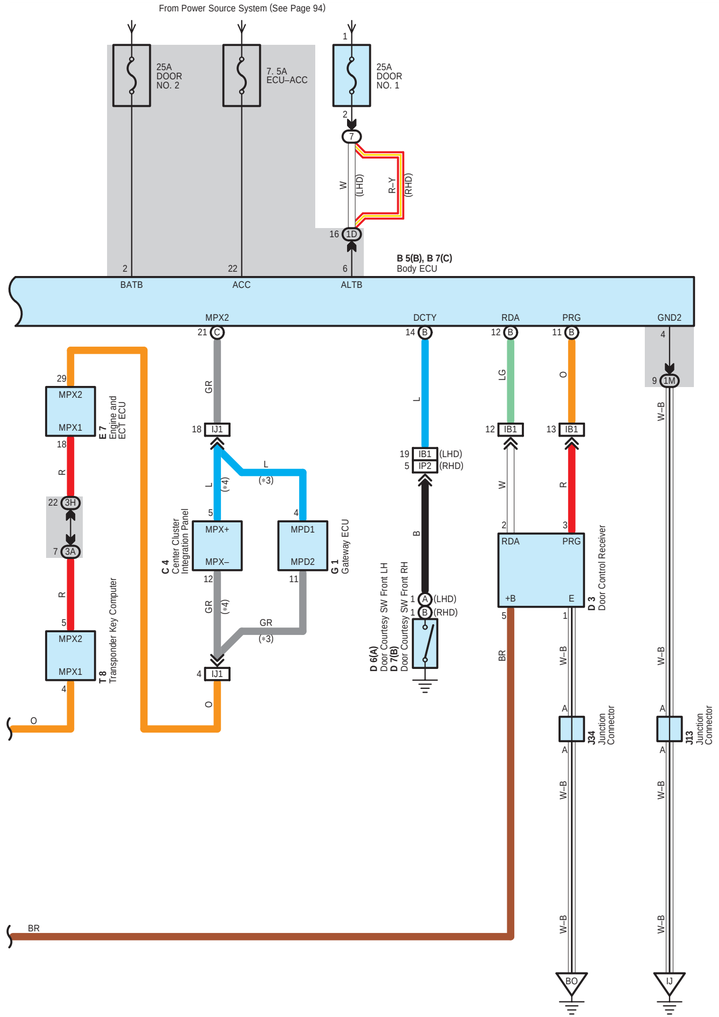
Moon Roof