(Cont. next page) 1

Power Source

Multiplex Communication System (BEAN) (LHD)

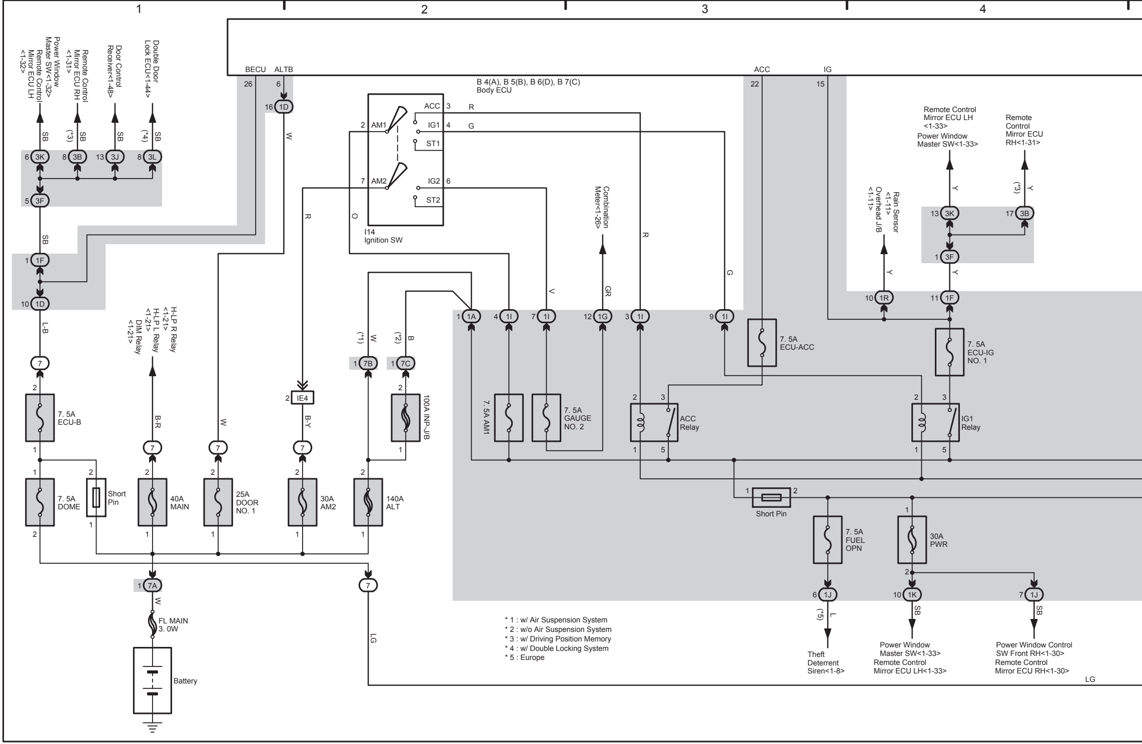
1
2
3
4
Power Window Master SW<1-32> Remote Control Mirror ECU LH <1-32>
Remote Control Mirror ECU RH <1-31>
Door Control Receiver<1-48>
Double Door Lock ECU<1-44>
SB
(*3) SB
SB
(*4) SB
6 3K
8 3B
13 3J
8 3L
5 3F
SB
1 1F
10 1D
L-B
7
2
7. 5A ECU-B
1
1
7. 5A DOME
2
2
Short Pin
1
H-LP R Relay <1-21>
H-LP L Relay <1-21>
DIM Relay <1-21>
B-R
7
2
40A MAIN
1
W
7
2
25A DOOR NO. 1
1
BECU
ALTB
26
6
16 1D
W
B 4(A), B 5(B), B 6(D), B 7(C)
Body ECU
R
2 IE4
B-Y
7
2
30A AM2
1
1 7A
W
FL MAIN 3. 0W
Battery
ACC 3 R
2 AM1
IG1 4 G
ST1
7 AM2
IG2 6
ST2
I14
Ignition SW
O
(*1) W
(*2) B
1 7B
1 7C
2
100A INP-J/B
1
2
140A ALT
1
7
LG
1 1A
4 1I
7 1I
12 1G
3 1I
9 1I
V
Combination Meter<1-26>
GR
R
G
7. 5A AM1
7. 5A GAUGE NO. 2
2
3
ACC Relay
1
5
1
Short Pin
2
ACC
IG
22
15
7. 5A ECU-ACC
Rain Sensor <1-11>
Overhead J/B <1-11>
Y
10 1R
Remote Control Mirror ECU LH <1-33>
Power Window Master SW<1-33>
Remote Control Mirror ECU RH<1-31>
Y
(*3) Y
13 3K
17 3B
1 3F
Y
11 1F
7. 5A ECU-IG NO. 1
2
3
IG1 Relay
1
5
7. 5A FUEL OPN
1
30A PWR
2
6 1J
(*5) L
Theft Deterrent Siren<1-8>
10 1K
SB
Power Window Master SW<1-33>
Remote Control Mirror ECU LH<1-33>
7 1J
SB
Power Window Control SW Front RH<1-30>
Remote Control Mirror ECU RH<1-30>
LG

* 1 : w/ Air Suspension System
* 2 : w/o Air Suspension System
* 3 : w/ Driving Position Memory
* 4 : w/ Double Locking System
* 5 : Europe

Multiplex Communication System (BEAN) (LHD)

* 4 : w/ Double Locking System
* 5 : Europe

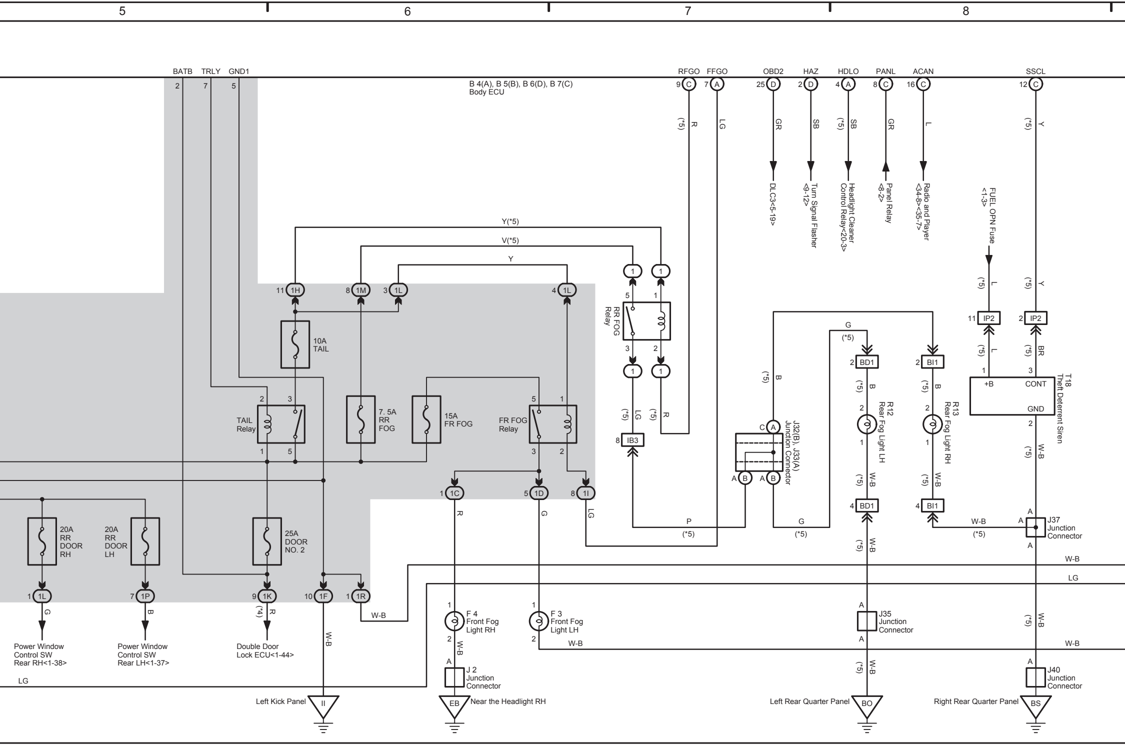
5
6
7
8
BATB
TRLY
GND1
B 4(A), B 5(B), B 6(D), B 7(C)
Body ECU
RFGO
FFGO
OBD2
HAZ
HDLO
PANL
ACAN
SSCL
DLC3<5-19>
Turn Signal Flasher <9-12>
Headlight Cleaner Control Relay<20-3>
Panel Relay <8-2>
Radio and Player <34-8><35-7>
FUEL OPN Fuse <1-3>
Y(*5)
V(*5)
Y
10A TAIL
TAIL Relay
7. 5A RR FOG
15A FR FOG
FR FOG Relay
RR FOG Relay
IB3
J32(B), J33(A) Junction Connector
BD1
BI1
IP2
T18 Theft Deterrent Siren
+B
CONT
GND
R12 Rear Fog Light LH
R13 Rear Fog Light RH
J37 Junction Connector
J35 Junction Connector
J40 Junction Connector
20A RR DOOR RH
20A RR DOOR LH
25A DOOR NO. 2
Power Window Control SW Rear RH<1-38>
Power Window Control SW Rear LH<1-37>
Double Door Lock ECU<1-44>
F 4 Front Fog Light RH
F 3 Front Fog Light LH
J 2 Junction Connector
Left Kick Panel
II
EB
Near the Headlight RH
Left Rear Quarter Panel
BO
Right Rear Quarter Panel
BS
W-B
LG
R
G
B
P
L
SB
GR
BR

(Cont. next page) 1

Multiplex Communication System (BEAN) (LHD)

* 5 : Europe
* 6 : G. C. C.
* 7 : Normal Type Moon Roof
* 8 : Multi Panel Type Moon Roof

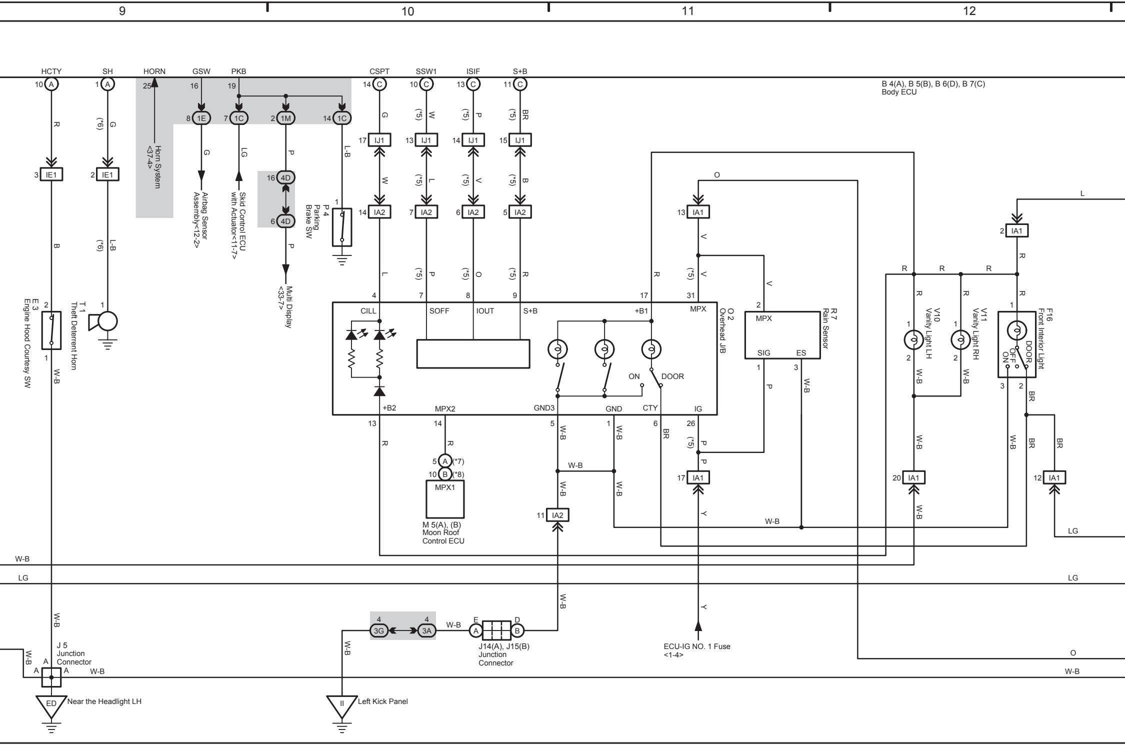
9
10
11
12
HCTY
SH
HORN
GSW
PKB
CSPT
SSW1
ISIF
S+B
B 4(A), B 5(B), B 6(D), B 7(C)
Body ECU
Horn System <37-4>
Airbag Sensor Assembly<12-2>
Skid Control ECU with Actuator<11-7>
Multi Display <33-7>
P 4 Parking Brake SW
E 3 Engine Hood Courtesy SW
T 1 Theft Deterrent Horn
IE1
IJ1
IA2
IA1
1E
1C
1M
4D
O 2 Overhead J/B
CILL
SOFF
IOUT
S+B
+B1
MPX
+B2
MPX2
GND3
GND
CTY
IG
ON
DOOR
R 7 Rain Sensor
MPX
SIG
ES
V10 Vanity Light LH
V11 Vanity Light RH
F16 Front Interior Light
DOOR
OFF
ON
MPX1
M 5(A), (B) Moon Roof Control ECU
(*7)
(*8)
(*5)
(*6)
3G
3A
J14(A), J15(B) Junction Connector
J 5 Junction Connector
ED
Near the Headlight LH
II
Left Kick Panel
ECU-IG NO. 1 Fuse <1-4>
W-B
LG
O
L
R
G
B
L-B
LG
P
W
V
BR
Y

(Cont. next page) 1

* 3 : w/ Driving Position Memory
* 5 : Europe
* 6 : G. C. C.
* 9 : w/ Power Back Door
*10 : w/o Power Back Door

Multiplex Communication System (BEAN) (LHD)

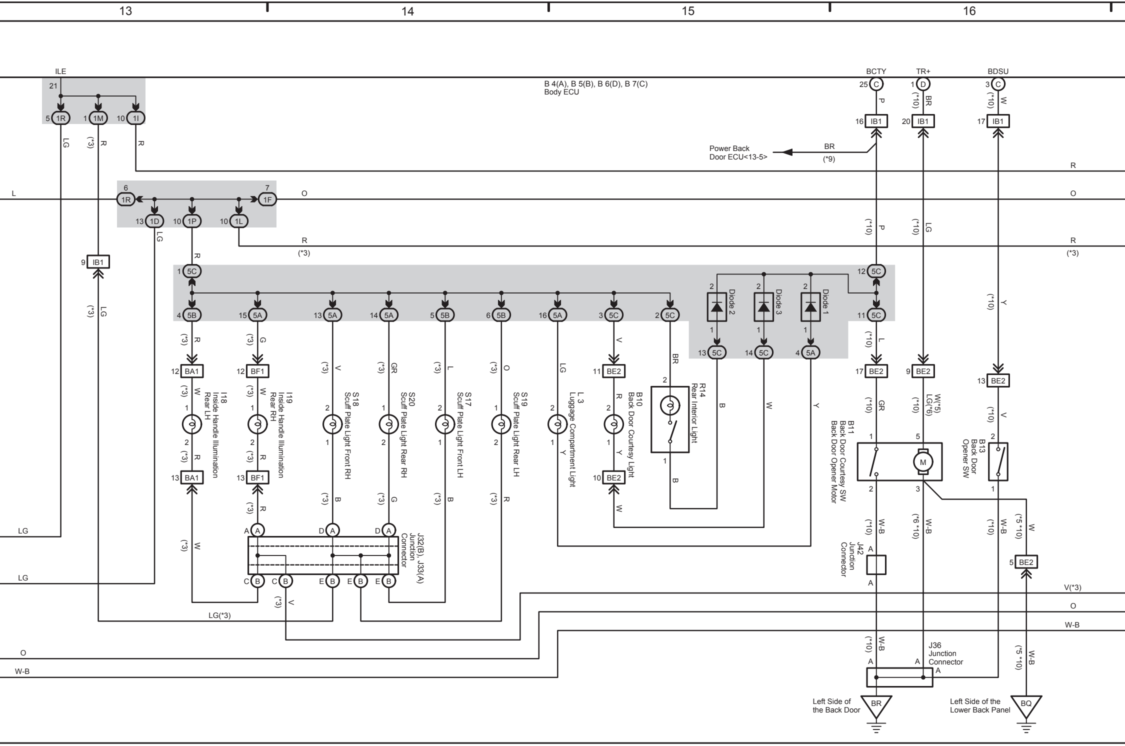
13
14
15
16
ILE
BCTY
TR+
BDSU
B 4(A), B 5(B), B 6(D), B 7(C)
Body ECU
Power Back
Door ECU<13-5>
BR
(*9)
1R
1M
1I
1D
1P
1L
1F
IB1
5A
5B
5C
Diode 1
Diode 2
Diode 3
BA1
BF1
BE2
I18
Inside Handle Illumination
Rear LH
I19
Inside Handle Illumination
Rear RH
S18
Scuff Plate Light Front RH
S20
Scuff Plate Light Rear RH
S17
Scuff Plate Light Front LH
S19
Scuff Plate Light Rear LH
L 3
Luggage Compartment Light
B10
Back Door Courtesy Light
R14
Rear Interior Light
B11
Back Door Courtesy SW
Back Door Opener Motor
B13
Back Door
Opener SW
M
J32(B), J33(A)
Junction
Connector
J42
Junction
Connector
J36
Junction
Connector
Left Side of
the Back Door
BR
Left Side of the
Lower Back Panel
BQ
LG(*3)
V(*3)
W(*5)
LG(*6)
L
O
R
LG
W-B
(*3)
(*10)
(*5 *10)
(*6 *10)

Multiplex Communication System (BEAN) (LHD)

* 3 : w/ Driving Position Memory

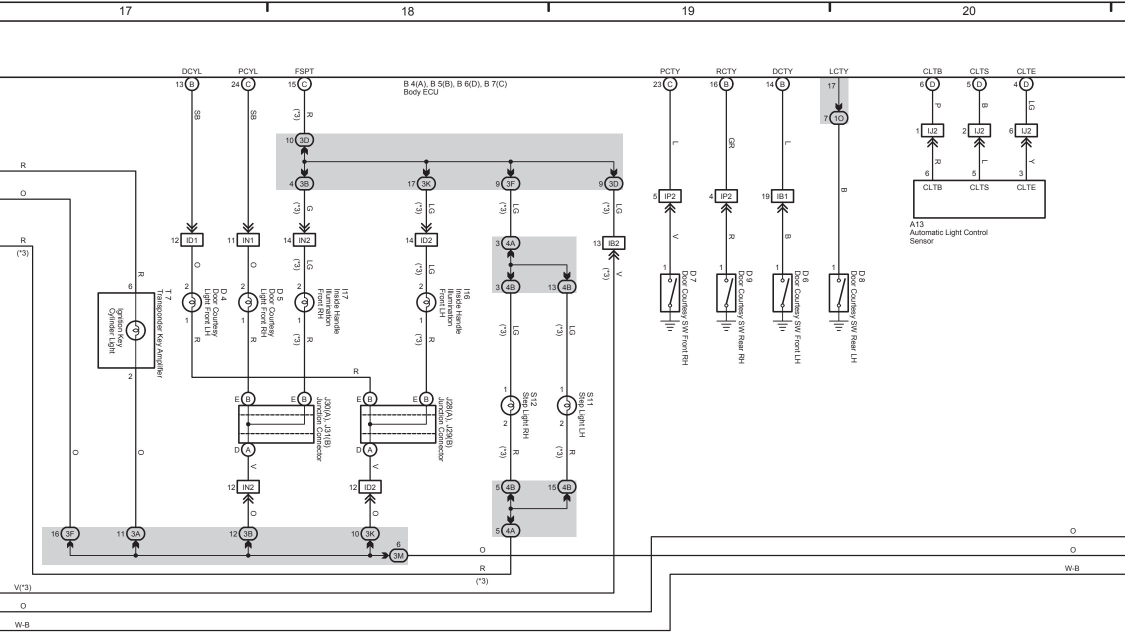
17
18
19
20
DCYL
PCYL
FSPT
PCTY
RCTY
DCTY
LCTY
CLTB
CLTS
CLTE
B 4(A), B 5(B), B 6(D), B 7(C)
Body ECU
A13
Automatic Light Control Sensor
T 7
Transponder Key Amplifier
Ignition Key Cylinder Light
D 4
Door Courtesy Light Front LH
D 5
Door Courtesy Light Front RH
I17
Inside Handle Illumination Front RH
I16
Inside Handle Illumination Front LH
J30(A), J31(B)
Junction Connector
J28(A), J29(B)
Junction Connector
S12
Step Light RH
S11
Step Light LH
D7
Door Courtesy SW Front RH
D9
Door Courtesy SW Rear RH
D6
Door Courtesy SW Front LH
D8
Door Courtesy SW Rear LH
ID1
IN1
IN2
ID2
IB2
IP2
IB1
IJ2
3D
3B
3K
3F
3A
3M
4A
4B
1O
SB
R
O
G
LG
L
GR
B
V
P
Y
W-B
V(*3)
(*3)

(Cont. next page) 1

Multiplex Communication System (BEAN) (LHD)

* 5 : Europe
* 6 : G. C. C.
*11 : w/o Adaptive Front-Lighting System

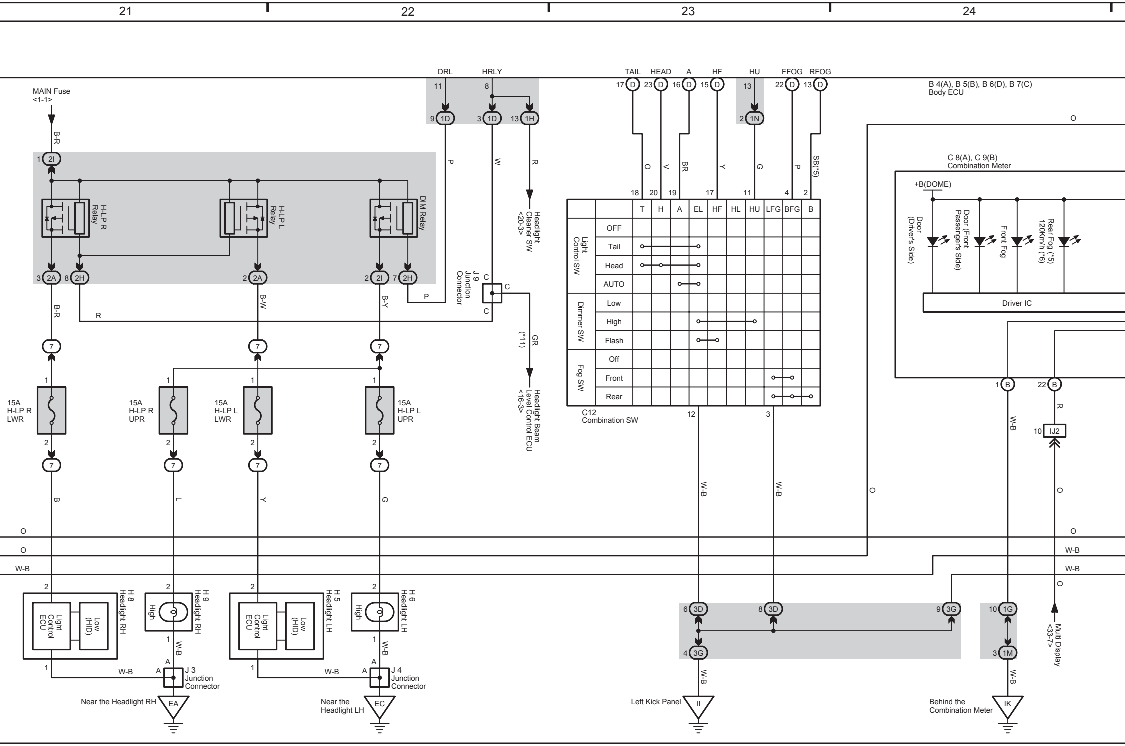
21
22
23
24
MAIN Fuse
<1-1>
B-R
2I
H-LP R Relay
H-LP L Relay
DIM Relay
2A
2H
2I
B-R
B-W
B-Y
R
P
7
15A H-LP R LWR
15A H-LP R UPR
15A H-LP L LWR
15A H-LP L UPR
B
L
Y
G
O
W-B
H 8 Headlight RH
Light Control ECU
Low (HID)
H 9 Headlight RH
High
H 5 Headlight LH
H 6 Headlight LH
J 3 Junction Connector
J 4 Junction Connector
Near the Headlight RH
EA
Near the Headlight LH
EC
DRL
HRLY
1D
1H
W
Headlight Cleaner SW
<20-3>
J 9 Junction Connector
GR
(*11)
Headlight Beam Level Control ECU
<16-3>
TAIL
HEAD
A
HF
HU
FFOG
RFOG
D
1N
B 4(A), B 5(B), B 6(D), B 7(C)
Body ECU
O
V
BR
G
SB(*5)
12
3
3D
3G
Left Kick Panel
II
C 8(A), C 9(B)
Combination Meter
+B(DOME)
Door (Driver's Side)
Door (Front Passenger's Side)
Front Fog
Rear Fog (*5) 120Km/h (*6)
Driver IC
IJ2
1G
1M
Behind the Combination Meter
IK
Multi Display
<33-7>

		T	H	A	EL	HF	HL	HU	LFG	BFG	B
		18	20	19		17		11		4	2
Light Control SW	OFF										
	Tail	○			○						
	Head	○	○		○						
	AUTO			○	○						
Dimmer SW	Low										
	High				○			○			
	Flash				○	○					
Fog SW	Off										
	Front								○	○	
	Rear								○	○	○

C12
Combination SW

(Cont. next page) 1

Multiplex Communication System (BEAN) (LHD)

25	26	27	28

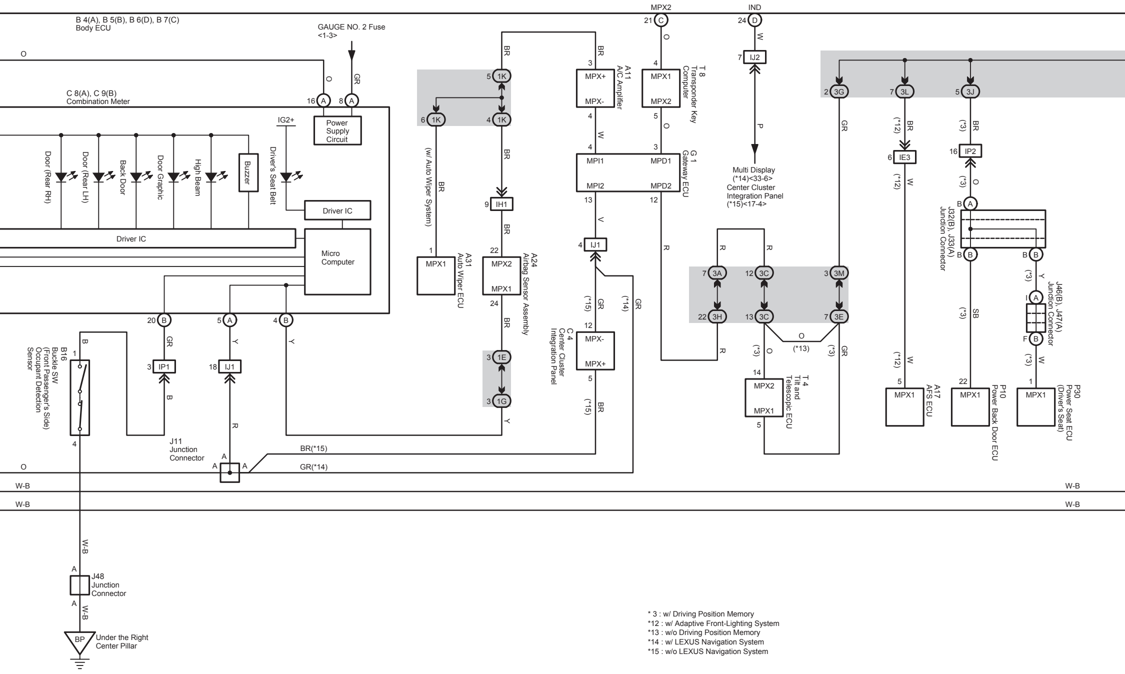
B 4(A), B 5(B), B 6(D), B 7(C)
Body ECU
GAUGE NO. 2 Fuse
<1-3>
C 8(A), C 9(B)
Combination Meter
Power Supply Circuit
IG2+
Door (Rear RH)
Door (Rear LH)
Back Door
Door Graphic
High Beam
Buzzer
Driver's Seat Belt
Driver IC
Driver IC
Micro Computer
B16
Buckle SW
(Front Passenger's Side)
Occupant Detection Sensor
J11
Junction Connector
IP1
IJ1
J48
Junction Connector
BP
Under the Right Center Pillar
1K
IH1
1E
1G
(w/ Auto Wiper System)
A31
Auto Wiper ECU
MPX1
A24
Airbag Sensor Assembly
MPX2
MPX1
A11
A/C Amplifier
MPX+
MPX-
T 8
Transponder Key Computer
MPX1
MPX2
MPX2
MPX
IND
G 1
Gateway ECU
MPI1
MPD1
MPI2
MPD2
IJ2
Multi Display
(*14)<33-6>
Center Cluster Integration Panel
(*15)<17-4>
C 4
Center Cluster Integration Panel
MPX-
MPX+
BR(*15)
GR(*14)
3A
3H
3C
3M
3E
3G
3L
3J
T 4
Tilt and Telescopic ECU
MPX2
MPX1
IE3
IP2
A17
AFS ECU
MPX1
J32(B), J33(A)
Junction Connector
J46(B), J47(A)
Junction Connector
P10
Power Back Door ECU
MPX1
P30
Power Seat ECU
(Driver's Seat)
MPX1
(*3)
(*12)
(*13)
(*14)
(*15)
O
GR
BR
W
P
R
V
Y
B
SB
W-B

* 3 : w/ Driving Position Memory
*12 : w/ Adaptive Front-Lighting System
*13 : w/o Driving Position Memory
*14 : w/ LEXUS Navigation System
*15 : w/o LEXUS Navigation System

(Cont. next page) 1

Multiplex Communication System (BEAN) (LHD)

* 3 : w/ Driving Position Memory
* 4 : w/ Double Locking System

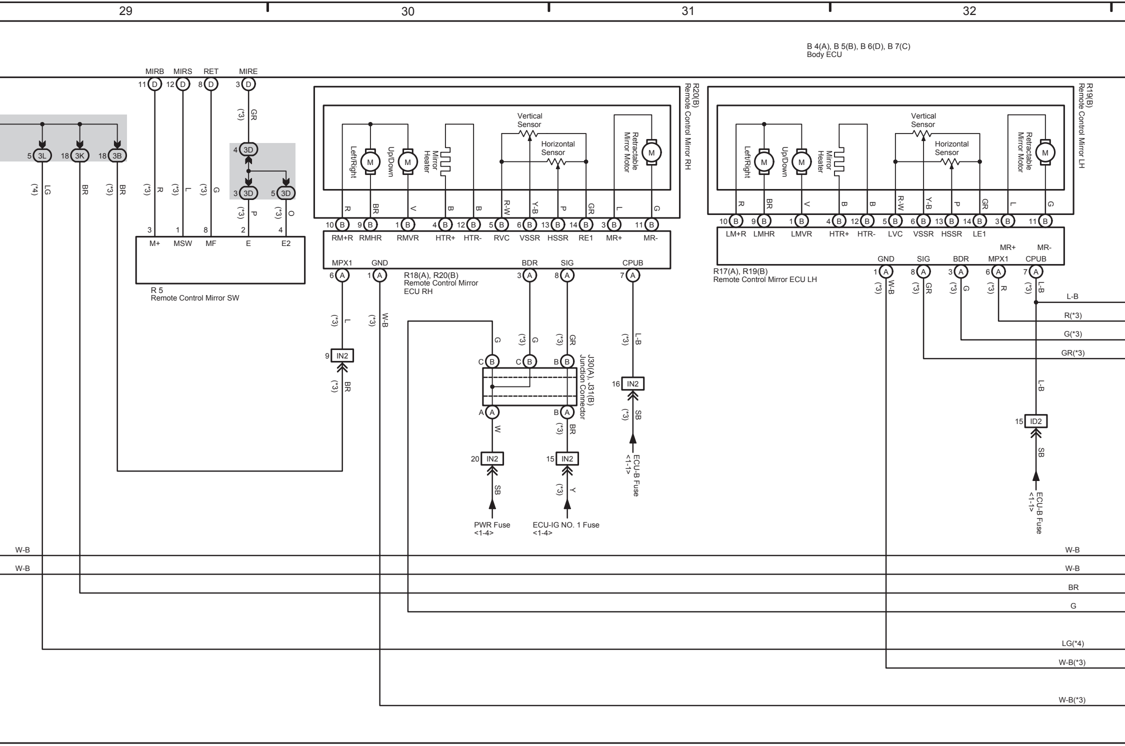
29
30
31
32
B 4(A), B 5(B), B 6(D), B 7(C)
Body ECU
MIRB
MIRS
RET
MIRE
11 D
12 D
8 D
3 D
5 3L
18 3K
18 3B
4 3D
3 3D
5 3D
(*4) LG
BR
(*3) BR
(*3) R
(*3) L
(*3) G
(*3) GR
(*3) P
(*3) O
M+
MSW
MF
E
E2
R 5
Remote Control Mirror SW
R20(B)
Remote Control Mirror RH
Left/Right
Up/Down
Mirror Heater
Vertical Sensor
Horizontal Sensor
Retractable Mirror Motor
M
RM+R
RMHR
RMVR
HTR+
HTR-
RVC
VSSR
HSSR
RE1
MR+
MR-
MPX1
GND
BDR
SIG
CPUB
R18(A), R20(B)
Remote Control Mirror ECU RH
R19(B)
Remote Control Mirror LH
LM+R
LMHR
LMVR
LVC
LE1
R17(A), R19(B)
Remote Control Mirror ECU LH
R
BR
V
B
R-W
Y-B
GR
W-B
L-B
IN2
ID2
J30(A), J31(B)
Junction Connector
W
SB
Y
PWR Fuse
<1-4>
ECU-IG NO. 1 Fuse
<1-4>
ECU-B Fuse
<1-1>
R(*3)
G(*3)
GR(*3)
LG(*4)
W-B(*3)

(Cont. next page) 1

Multiplex Communication System (BEAN) (LHD)

* 3 : w/ Driving Position Memory
* 4 : w/ Double Locking System

33 34 35 36

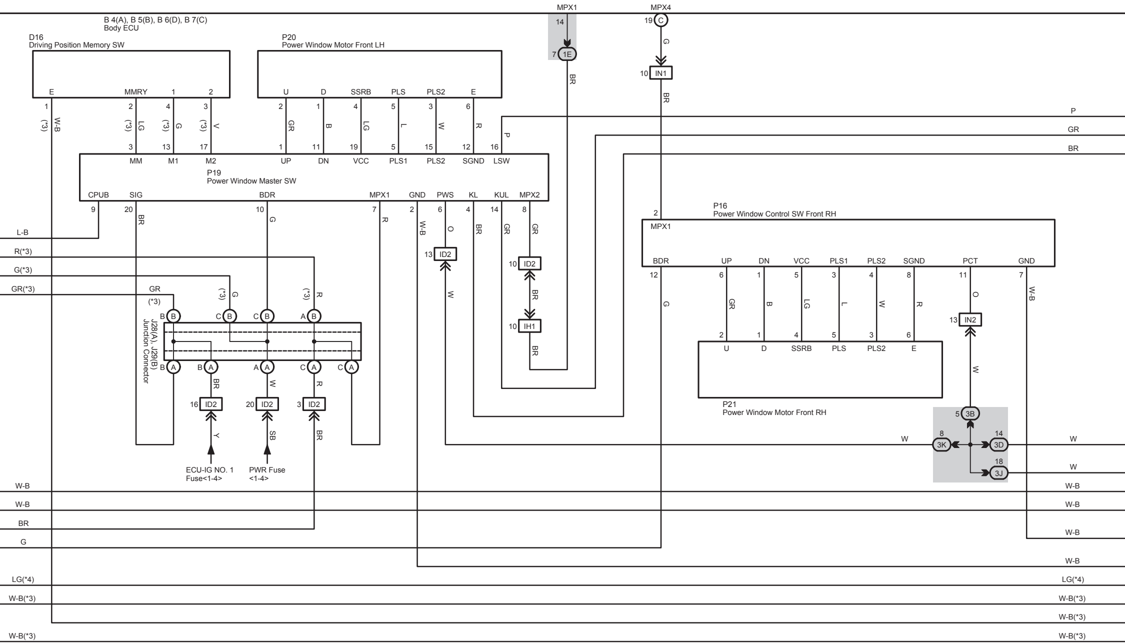
MPX1
14
7 1E
MPX4
19 C
G
10 IN1
BR
B 4(A), B 5(B), B 6(D), B 7(C)
Body ECU
D16
Driving Position Memory SW
E
MMRY
1
2
1
2
4
3
(*3) W-B
(*3) LG
(*3) G
(*3) V
3
13
17
P20
Power Window Motor Front LH
U
D
SSRB
PLS
PLS2
E
2
1
4
5
3
6
GR
B
LG
L
W
R
1
11
19
5
15
12
16
P
MM
M1
M2
UP
DN
VCC
PLS1
PLS2
SGND
LSW
P19
Power Window Master SW
CPUB
SIG
BDR
MPX1
GND
PWS
KL
KUL
MPX2
9
20
10
7
2
6
4
14
8
BR
G
R
W-B
O
BR
GR
GR
13 ID2
10 ID2
W
BR
10 IH1
BR
P
GR
BR
L-B
R(*3)
G(*3)
GR(*3)
GR
(*3)
(*3) G
(*3) R
B B
C B
C B
A B
J28(A), J29(B)
Junction Connector
B A
B A
A A
C A
C A
BR
W
R
16 ID2
20 ID2
3 ID2
Y
SB
BR
ECU-IG NO. 1
Fuse<1-4>
PWR Fuse
<1-4>
2
P16
Power Window Control SW Front RH
MPX1
BDR
UP
DN
VCC
PLS1
PLS2
SGND
PCT
GND
12
6
1
5
3
4
8
11
7
G
GR
B
LG
L
W
R
O
W-B
13 IN2
2
1
4
5
3
6
U
D
SSRB
PLS
PLS2
E
W
P21
Power Window Motor Front RH
5 3B
8 3K
14 3D
18 3J
W
W
W
W-B
W-B
BR
G
LG(*4)
W-B(*3)
W-B(*3)
W-B
W-B
W-B
W-B
LG(*4)
W-B(*3)
W-B(*3)
W-B(*3)

Multiplex Communication System (BEAN) (LHD)

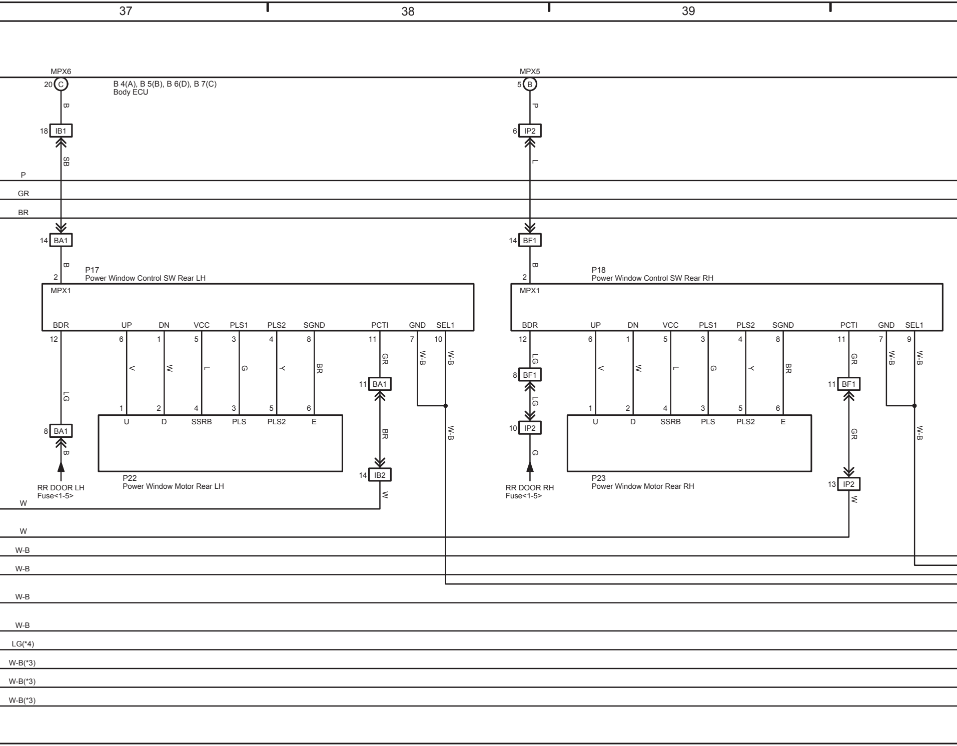
37
38
39
MPX6
20 C
B 4(A), B 5(B), B 6(D), B 7(C)
Body ECU
MPX5
5 B
B
P
18 IB1
6 IP2
SB
L
P
GR
BR
14 BA1
14 BF1
B
B
2
P17
Power Window Control SW Rear LH
MPX1
BDR
UP
DN
VCC
PLS1
PLS2
SGND
PCTI
GND
SEL1
12
6
1
5
3
4
8
11
7
10
LG
V
W
L
G
Y
BR
GR
W-B
W-B
11 BA1
BR
1
2
4
3
5
6
U
D
SSRB
PLS
PLS2
E
P22
Power Window Motor Rear LH
8 BA1
B
RR DOOR LH
Fuse<1-5>
14 IB2
W
2
P18
Power Window Control SW Rear RH
MPX1
BDR
UP
DN
VCC
PLS1
PLS2
SGND
PCTI
GND
SEL1
12
6
1
5
3
4
8
11
7
9
LG
V
W
L
G
Y
BR
GR
W-B
W-B
8 BF1
LG
11 BF1
10 IP2
G
1
2
4
3
5
6
U
D
SSRB
PLS
PLS2
E
P23
Power Window Motor Rear RH
RR DOOR RH
Fuse<1-5>
GR
13 IP2
W
W
W
W-B
W-B
W-B
W-B
LG(*4)
W-B(*3)
W-B(*3)
W-B(*3)

* 3 : w/ Driving Position Memory
* 4 : w/ Double Locking System

Multiplex Communication System (BEAN) (LHD)

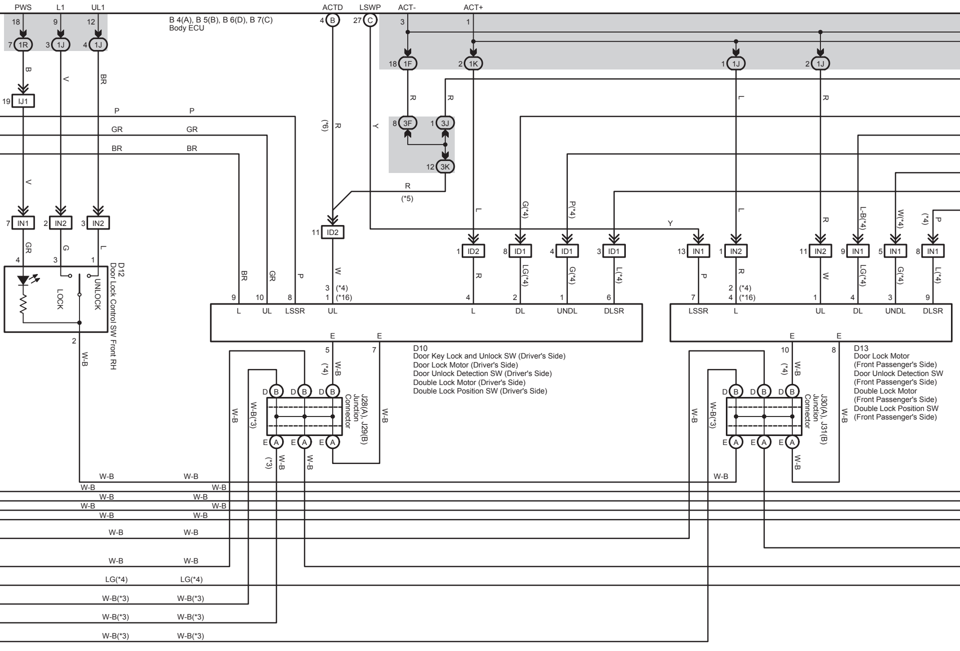

PWS
L1
UL1
B 4(A), B 5(B), B 6(D), B 7(C)
Body ECU
ACTD
LSWP
ACT-
ACT+
18
9
12
4 B
27 C
3
1
7 1R
3 1J
4 1J
18 1F
2 1K
1 1J
2 1J
B
V
BR
R
R
L
R
19 IJ1
P
P
GR
GR
BR
BR
(*6) R
Y
8 3F
1 3J
12 3K
V
R
(*5)
L
G(*4)
P(*4)
L
L
R
L-B(*4)
W(*4)
P (*4)
Y
7 IN1
2 IN2
3 IN2
11 ID2
1 ID2
8 ID1
4 ID1
3 ID1
13 IN1
1 IN2
11 IN2
9 IN1
5 IN1
8 IN1
GR
G
L
4
3
1
LOCK
UNLOCK
D12
Door Lock Control SW Front RH
2
W-B
BR
GR
P
W
R
LG(*4)
G(*4)
L(*4)
P
R
W
LG(*4)
G(*4)
L(*4)
9
10
8
3 (*4)
1 (*16)
4
2
1
6
7
2 (*4)
4 (*16)
1
4
3
9
L
UL
LSSR
UL
L
DL
UNDL
DLSR
LSSR
L
UL
DL
UNDL
DLSR
E
E
E
E
5
7
10
8
(*4) W-B
(*4) W-B
D10
Door Key Lock and Unlock SW (Driver's Side)
Door Lock Motor (Driver's Side)
Door Unlock Detection SW (Driver's Side)
Double Lock Motor (Driver's Side)
Double Lock Position SW (Driver's Side)
D13
Door Lock Motor
(Front Passenger's Side)
Door Unlock Detection SW
(Front Passenger's Side)
Double Lock Motor
(Front Passenger's Side)
Double Lock Position SW
(Front Passenger's Side)
D B
D B
D B
E A
E A
E A
J28(A), J29(B)
Junction
Connector
J30(A), J31(B)
Junction
Connector
W-B
W-B(*3)
W-B
W-B
W-B(*3)
W-B
(*3) W-B
W-B
W-B
W-B
W-B
W-B
W-B
W-B
W-B
W-B
W-B
W-B
W-B
W-B
W-B
W-B
W-B
W-B
W-B
LG(*4)
LG(*4)
W-B(*3)
W-B(*3)
W-B(*3)
W-B(*3)
W-B(*3)
W-B(*3)

* 3 : w/ Driving Position Memory
* 4 : w/ Double Locking System
* 5 : Europe
* 6 : G. C. C.
*16 : w/o Double Locking System

Multiplex Communication System (BEAN) (LHD)

Power Distributor

44 45 46 47 48

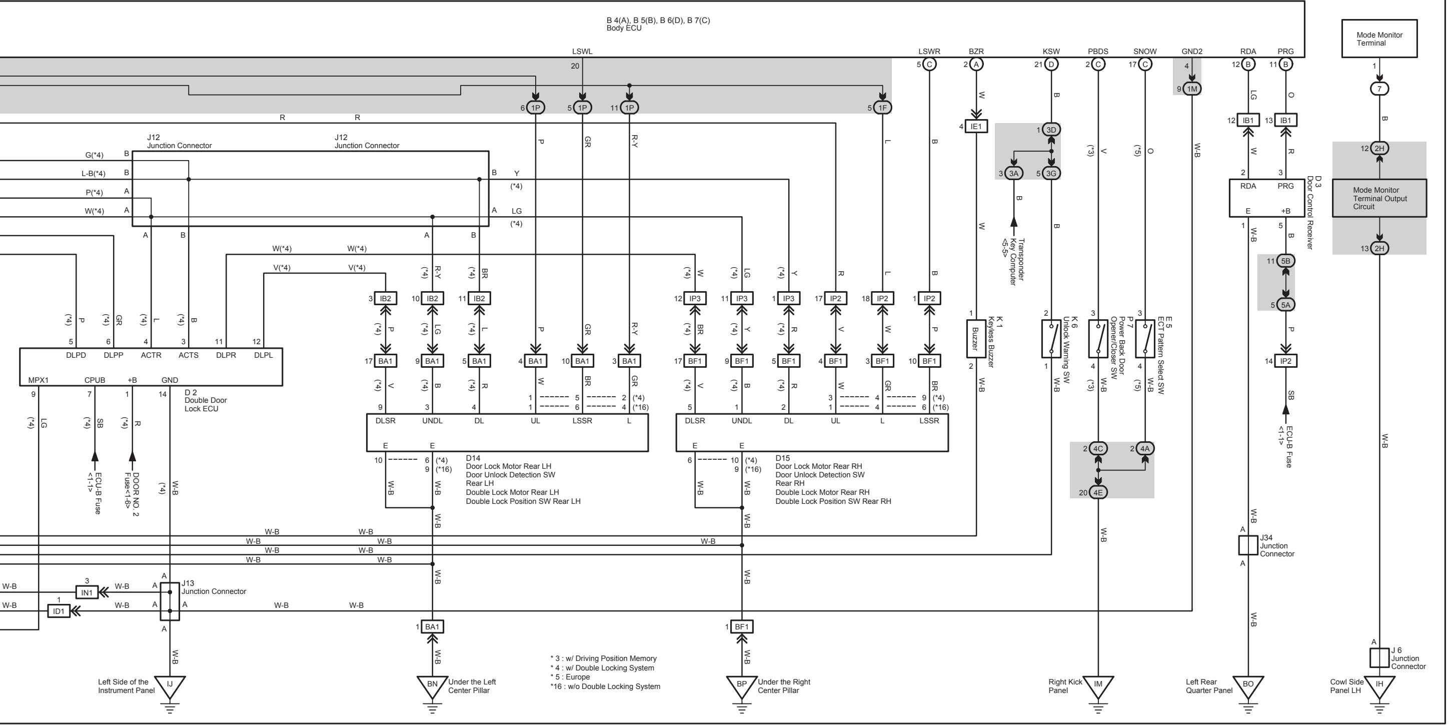
B 4(A), B 5(B), B 6(D), B 7(C)
Body ECU
LSWL
LSWR
BZR
KSW
PBDS
SNOW
GND2
RDA
PRG
Mode Monitor Terminal
J12
Junction Connector
J12
Junction Connector
Mode Monitor Terminal Output Circuit
D3
Door Control Receiver
Transponder Key Computer <5-5>
K1
Keyless Buzzer
Buzzer
K6
Unlock Warning SW
P7
Power Back Door Opener/Closer SW
E5
ECT Pattern Select SW
ECU-B Fuse <1-1>
DLPD
DLPP
ACTR
ACTS
DLPR
DLPL
MPX1
CPUB
+B
GND
D2
Double Door Lock ECU
ECU-B Fuse <1-1>
DOOR NO. 2 Fuse <1-6>
DLSR
UNDL
DL
UL
LSSR
L
D14
Door Lock Motor Rear LH
Door Unlock Detection SW
Rear LH
Double Lock Motor Rear LH
Double Lock Position SW Rear LH
D15
Door Lock Motor Rear RH
Door Unlock Detection SW
Rear RH
Double Lock Motor Rear RH
Double Lock Position SW Rear RH
J34
Junction Connector
J13
Junction Connector
J6
Junction Connector
IN1
ID1
BA1
BF1
Left Side of the Instrument Panel
IJ
BN
Under the Left Center Pillar
BP
Under the Right Center Pillar
Right Kick Panel
IM
Left Rear Quarter Panel
BO
Cowl Side Panel LH
IH
* 3 : w/ Driving Position Memory
* 4 : w/ Double Locking System
* 5 : Europe
*16 : w/o Double Locking System