* 1 : 3GR-FSE
* 2 : 3GR-FE

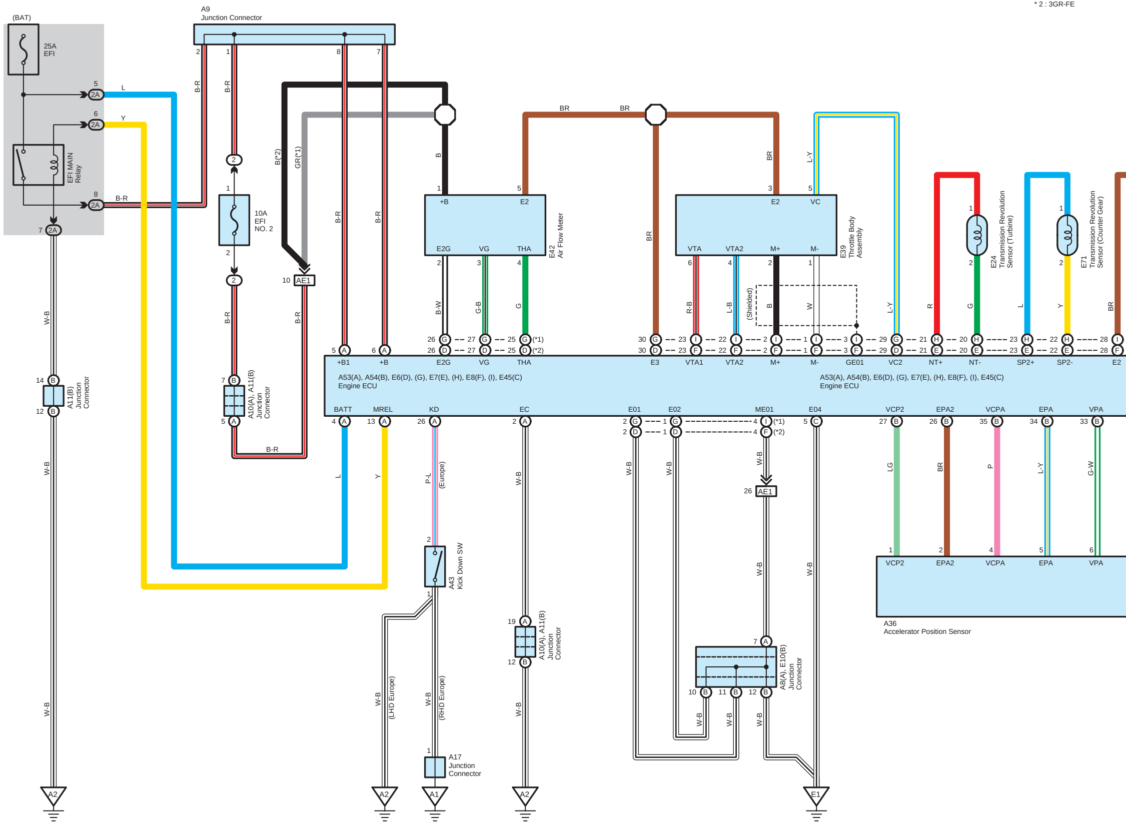

(BAT)
25A EFI
EFI MAIN Relay
A9 Junction Connector
10A EFI NO. 2
E42 Air Flow Meter
+B
E2
E2G
VG
THA
E39 Throttle Body Assembly
E2
VC
VTA
VTA2
M+
M-
(Shielded)
E24 Transmission Revolution Sensor (Turbine)
E71 Transmission Revolution Sensor (Counter Gear)
A53(A), A54(B), E6(D), (G), E7(E), (H), E8(F), (I), E45(C) Engine ECU
+B1
+B
E2G
VG
THA
E3
VTA1
VTA2
M+
M-
GE01
VC2
NT+
NT-
SP2+
SP2-
E2
BATT
MREL
KD
EC
E01
E02
ME01
E04
VCP2
EPA2
VCPA
EPA
VPA
A11(B) Junction Connector
A10(A), A11(B) Junction Connector
A43 Kick Down SW
A17 Junction Connector
A8(A), E10(B) Junction Connector
A36 Accelerator Position Sensor
VCP2
EPA2
VCPA
EPA
VPA
AE1
2A
L
Y
B-R
W-B
B(*2)
GR(*1)
B
BR
L-Y
B-W
G-B
G
R-B
L-B
W
R
LG
P
G-W
P-L
(Europe)
(LHD Europe)
(RHD Europe)
(*1)
(*2)
A2
A1
E1

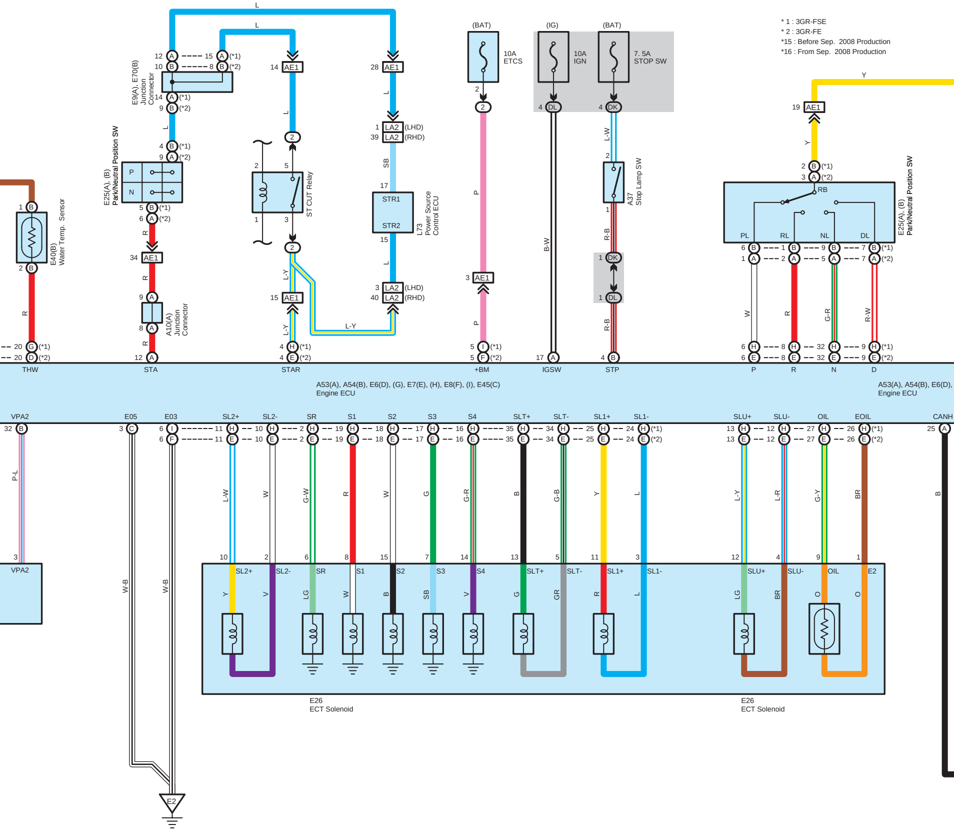
E40(B)
Water Temp. Sensor
E25(A), (B)
Park/Neutral Position SW
E9(A), E70(B)
Junction Connector
A10(A)
Junction Connector
ST CUT Relay
L73
Power Source Control ECU
STR1
STR2
(BAT)
10A
ETCS
(IG)
10A
IGN
(BAT)
7. 5A
STOP SW
A37
Stop Lamp SW
E25(A), (B)
Park/Neutral Position SW
RB
PL
RL
NL
DL
P
N
AE1
LA2
(LHD)
(RHD)
DL
DK
L
L-Y
SB
P
B-W
L-W
R-B
Y
W
R
G-R
R-W
THW
STA
STAR
+BM
IGSW
STP
P
R
N
D
A53(A), A54(B), E6(D), (G), E7(E), (H), E8(F), (I), E45(C)
Engine ECU
A53(A), A54(B), E6(D),
Engine ECU
VPA2
E05
E03
SL2+
SL2-
SR
S1
S2
S3
S4
SLT+
SLT-
SL1+
SL1-
SLU+
SLU-
OIL
EOIL
CANH
P-L
W-B
L-W
W
G-W
R
W
G
G-R
B
G-B
Y
L
L-Y
L-R
G-Y
BR
B
VPA2
Y
V
LG
W
B
SB
V
G
GR
R
L
LG
BR
O
O
E2
E26
ECT Solenoid
E26
ECT Solenoid
(*1)
(*2)

* 1 : 3GR-FSE
* 2 : 3GR-FE
*15 : Before Sep. 2008 Production
*16 : From Sep. 2008 Production

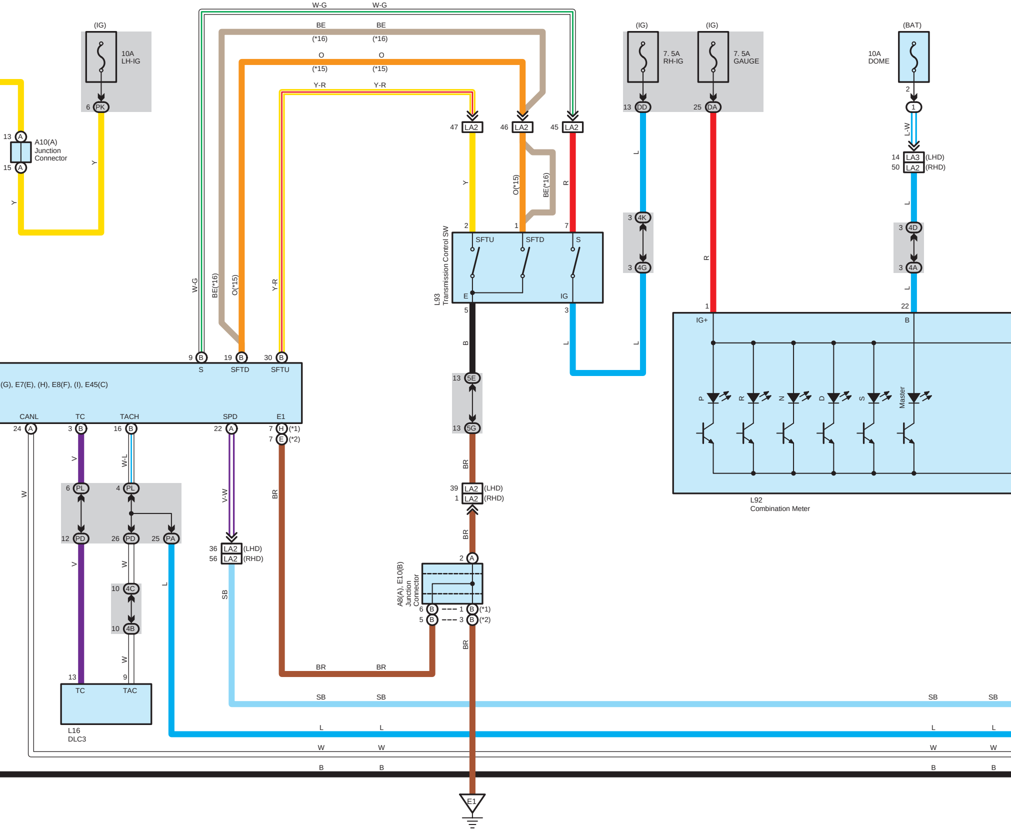
W-G
W-G
BE
BE
(*16)
(*16)
O
O
(*15)
(*15)
Y-R
Y-R
(IG)
10A
LH-IG
6 PK
13 A
A10(A)
Junction
Connector
15 A
Y
Y
47 LA2
46 LA2
45 LA2
Y
O(*15)
BE(*16)
R
2
1
7
SFTU
SFTD
S
E
IG
L93
Transmission Control SW
5
3
B
L
13 5E
13 5G
BR
39 LA2 (LHD)
1 LA2 (RHD)
BR
2 A
A8(A), E10(B)
Junction
Connector
6 B
1 B (*1)
5 B
3 B (*2)
BR
E1
(IG)
7. 5A
RH-IG
13 DD
L
3 4K
3 4G
L
L
(IG)
7. 5A
GAUGE
25 DA
R
R
1
IG+
(BAT)
10A
DOME
2
1
L-W
14 LA3 (LHD)
50 LA2 (RHD)
L
3 4D
3 4A
L
22
B
P
R
N
D
S
Master
L92
Combination Meter
W-G
BE(*16)
O(*15)
Y-R
9 B
19 B
30 B
S
SFTD
SFTU
(G), E7(E), (H), E8(F), (I), E45(C)
CANL
TC
TACH
SPD
E1
24 A
3 B
16 B
22 A
7 H (*1)
7 E (*2)
W
V
W-L
6 PL
4 PL
12 PD
26 PD
25 PA
V
W
L
10 4C
10 4B
W
13
9
TC
TAC
L16
DLC3
V-W
36 LA2 (LHD)
56 LA2 (RHD)
SB
BR
BR
BR
SB
SB
SB
SB
L
L
L
L
W
W
W
W
B
B
B
B

* 1 : 3GR-FSE
* 2 : 3GR-FE
* 3 : Middle East
* 4 : Except Middle East
*10 : Before Sep. 2007 Production
*11 : From Sep. 2007 Production
*15 : Before Sep. 2008 Production
*16 : From Sep. 2008 Production

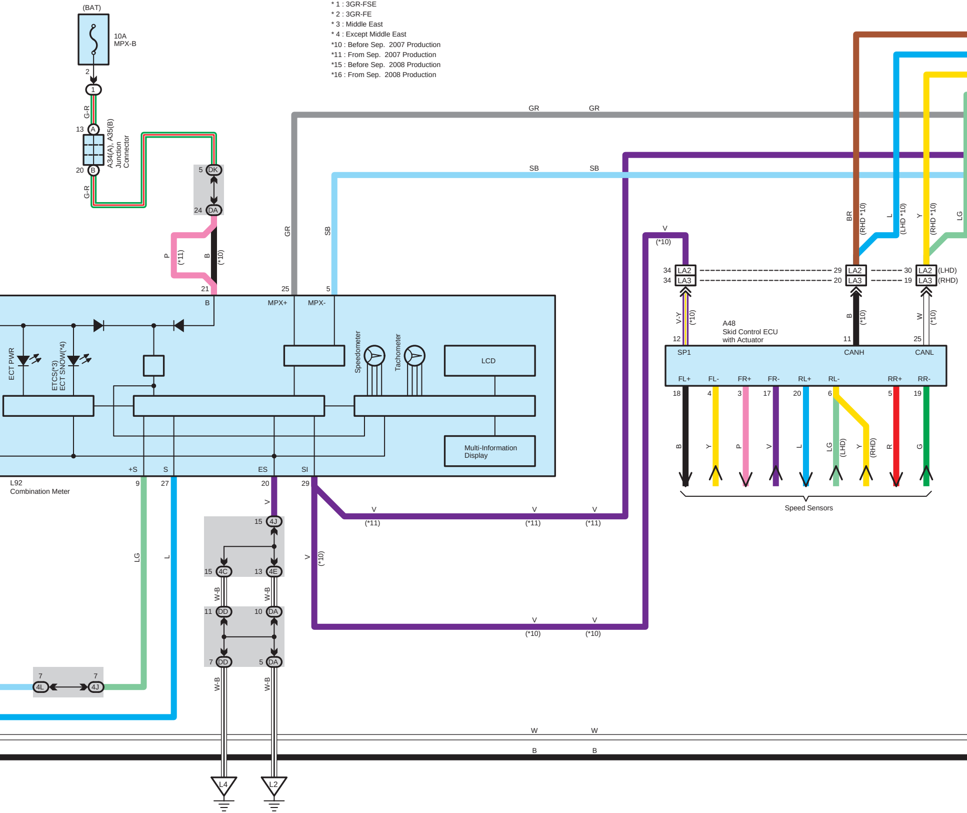
(BAT)
10A
MPX-B
2
1
G-R
13
A
A34(A), A35(B)
Junction
Connector
20
B
G-R
5
DK
24
DA
P
(*11)
B
(*10)
21
GR
GR
GR
25
SB
SB
SB
5
B
MPX+
MPX-
ECT PWR
ETCS(*3)
ECT SNOW(*4)
Speedometer
Tachometer
LCD
Multi-Information
Display
+S
S
ES
SI
L92
Combination Meter
9
27
20
29
V
15
4J
15
4C
13
4E
W-B
W-B
11
DD
10
DA
7
DD
5
DA
W-B
W-B
V
(*11)
V
(*11)
V
(*11)
V
(*10)
V
(*10)
V
(*10)
LG
L
7
4L
7
4J
W
W
B
B
L4
L2
V
(*10)
34
LA2
34
LA3
29
LA2
20
LA3
30
LA2
(LHD)
19
LA3
(RHD)
BR
(RHD *10)
L
(LHD *10)
Y
(RHD *10)
LG
V-Y
(*10)
B
(*10)
W
(*10)
A48
Skid Control ECU
with Actuator
12
11
25
SP1
CANH
CANL
FL+
FL-
FR+
FR-
RL+
RL-
RR+
RR-
18
4
3
17
20
6
5
19
B
Y
P
V
L
LG
(LHD)
Y
(RHD)
R
G
Speed Sensors

* 5 : w/ Tire Pressure Warning System
*10 : Before Sep. 2007 Production
*11 : From Sep. 2007 Production

*12 : RHD From Sep. 2007 Production
*13 : Except *12

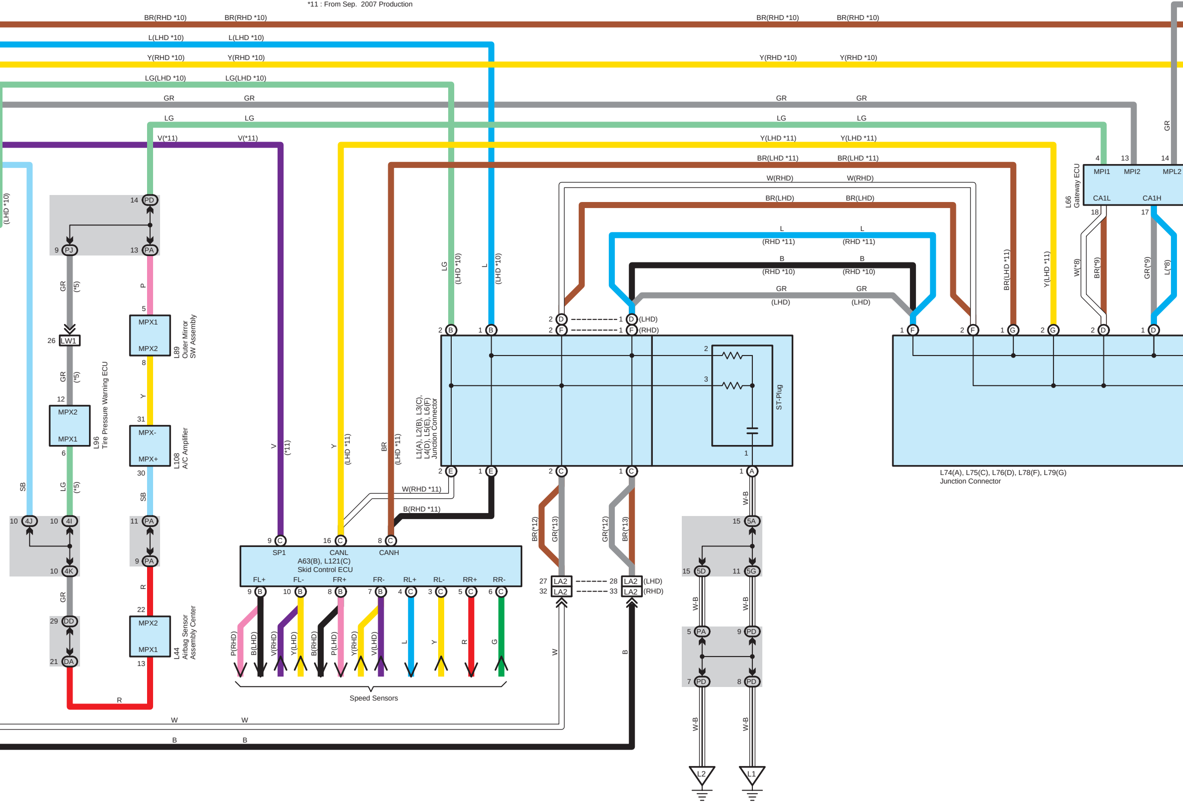

BR(RHD *10)
L(LHD *10)
Y(RHD *10)
LG(LHD *10)
GR
LG
V(*11)
Y(LHD *11)
BR(LHD *11)
W(RHD)
BR(LHD)
L
(RHD *11)
B
(RHD *10)
GR
(LHD)
(LHD *10)
14 PD
9 PJ
13 PA
GR (*5)
P
5
MPX1
MPX2
L89
Outer Mirror
SW Assembly
8
Y
26 LW1
GR (*5)
12
MPX2
MPX1
L96
Tire Pressure Warning ECU
6
31
MPX-
MPX+
L108
A/C Amplifier
30
LG (*5)
SB
10 4J
10 4I
11 PA
9 PA
10 4K
R
22
MPX2
MPX1
L44
Airbag Sensor
Assembly Center
13
GR
29 DD
21 DA
R
V (*11)
Y (LHD *11)
BR (LHD *11)
9 C
16 C
8 C
SP1
CANL
CANH
A63(B), L121(C)
Skid Control ECU
FL+
FL-
FR+
FR-
RL+
RL-
RR+
RR-
9 B
10 B
8 B
7 B
4 C
3 C
5 C
6 C
P(RHD)
B(LHD)
V(RHD)
Y(LHD)
B(RHD)
P(LHD)
Y(RHD)
V(LHD)
L
Y
R
G
Speed Sensors
W(RHD *11)
B(RHD *11)
LG (LHD *10)
L (LHD *10)
2 B
1 B
2 D
1 D (LHD)
2 F
1 F (RHD)
L1(A), L2(B), L3(C),
L4(D), L5(E), L6(F)
Junction Connector
2
3
1
ST-Plug
2 E
1 E
2 C
1 C
1 A
BR(*12)
GR(*13)
GR(*12)
BR(*13)
27 LA2
28 LA2 (LHD)
32 LA2
33 LA2 (RHD)
W
B
W-B
15 5A
15 5D
11 5G
5 PA
9 PD
7 PD
8 PD
L2
L1
W
B
BR(LHD *11)
Y(LHD *11)
W(*8)
BR(*9)
GR(*9)
L(*8)
GR
4
13
14
MPI1
MPI2
MPL2
CA1L
CA1H
18
17
L66
Gateway ECU
1 F
2 F
1 G
2 G
2 D
1 D
L74(A), L75(C), L76(D), L78(F), L79(G)
Junction Connector

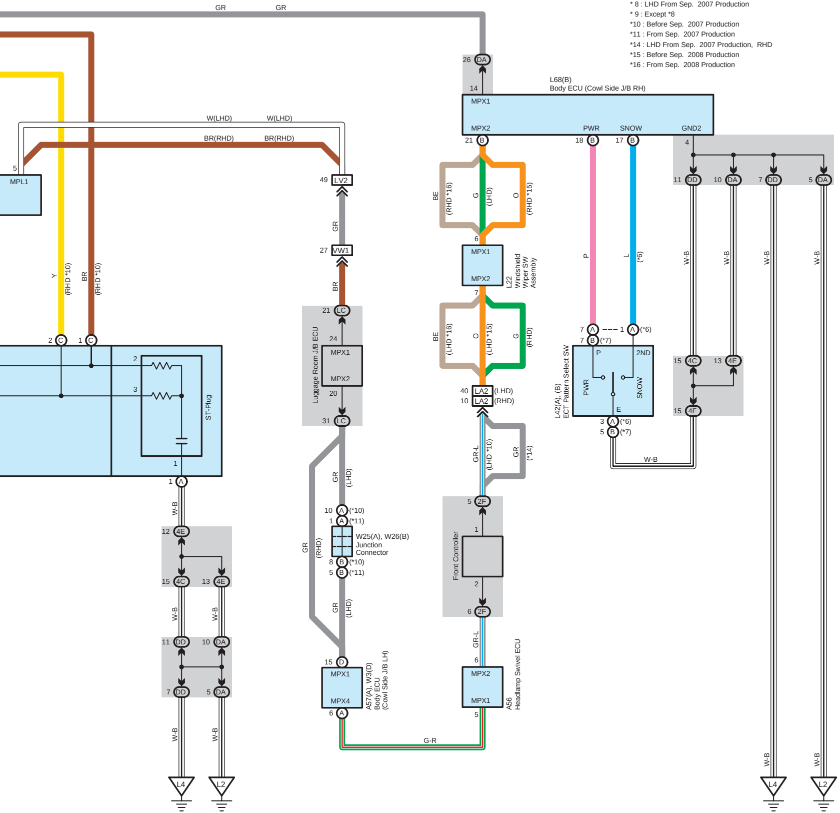

* 6 : w/ Snow Mode SW
* 7 : w/o Snow Mode SW
* 8 : LHD From Sep. 2007 Production
* 9 : Except *8
*10 : Before Sep. 2007 Production
*11 : From Sep. 2007 Production
*14 : LHD From Sep. 2007 Production, RHD
*15 : Before Sep. 2008 Production
*16 : From Sep. 2008 Production

GR
GR
W(LHD)
W(LHD)
BR(RHD)
BR(RHD)
5
MPL1
Y
(RHD *10)
BR
(RHD *10)
2 C
1 C
2
3
ST-Plug
1
1 A
W-B
12 4E
15 4C
13 4E
W-B
W-B
11 DD
10 DA
7 DD
5 DA
W-B
W-B
L4
L2
49 LV2
GR
27 VW1
BR
21 LC
24
MPX1
MPX2
20
31 LC
Luggage Room J/B ECU
GR
(LHD)
GR
(RHD)
10 A (*10)
1 A (*11)
W25(A), W26(B)
Junction
Connector
8 B (*10)
5 B (*11)
GR
(LHD)
15 D
MPX1
MPX4
6 A
A57(A), W3(D)
Body ECU
(Cowl Side J/B LH)
G-R
26 DA
14
L68(B)
Body ECU (Cowl Side J/B RH)
MPX1
MPX2
PWR
SNOW
GND2
21 B
18 B
17 B
4
BE
(RHD *16)
G
(LHD)
O
(RHD *15)
6
MPX1
MPX2
L22
Windshield
Wiper SW
Assembly
7
BE
(LHD *16)
O
(LHD *15)
G
(RHD)
40 LA2 (LHD)
10 LA2 (RHD)
GR-L
(LHD *10)
GR
(*14)
5 2F
1
Front Controller
2
6 2F
GR-L
6
MPX2
MPX1
5
A56
Headlamp Swivel ECU
P
L
(*6)
7 A
1 A (*6)
7 B (*7)
P
2ND
PWR
SNOW
E
L42(A), (B)
ECT Pattern Select SW
3 A (*6)
5 B (*7)
W-B
11 DD
10 DA
7 DD
5 DA
W-B
W-B
W-B
W-B
15 4C
13 4E
15 4F
W-B
W-B
L4
L2