MULTIPLEX COMMUNICATION SYSTEM (LHD)

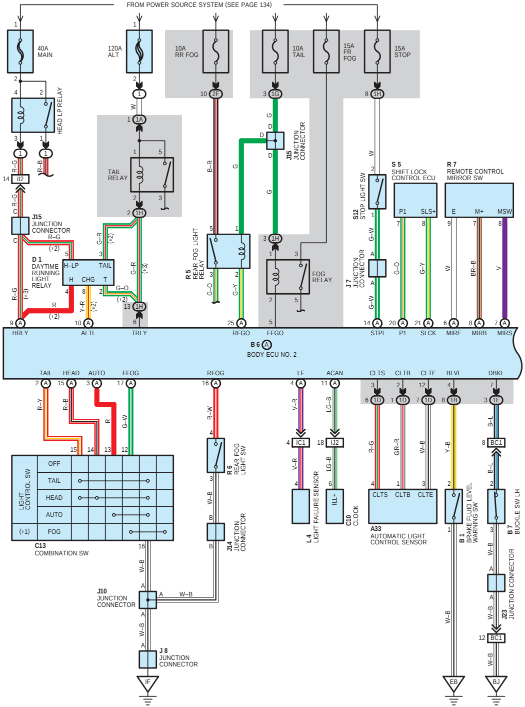
FROM POWER SOURCE SYSTEM (SEE PAGE 134)
40A MAIN
120A ALT
10A RR FOG
10A TAIL
15A FR FOG
15A STOP
HEAD LP RELAY
TAIL RELAY
J15 JUNCTION CONNECTOR
D 1 DAYTIME RUNNING LIGHT RELAY
H–LP
TAIL
H
CHG
T
R 5 REAR FOG LIGHT RELAY
FOG RELAY
S12 STOP LIGHT SW
J 7 JUNCTION CONNECTOR
S 5 SHIFT LOCK CONTROL ECU
P1
SLS+
R 7 REMOTE CONTROL MIRROR SW
E
M+
MSW
HRLY
ALTL
TRLY
RFGO
FFGO
STPI
P1
SLCK
MIRE
MIRB
MIRS
B 6 (A)
BODY ECU NO. 2
TAIL
HEAD
AUTO
FFOG
RFOG
LF
ACAN
CLTS
CLTB
CLTE
BLVL
DBKL
LIGHT CONTROL SW
OFF
TAIL
HEAD
AUTO
(∗1) FOG
C13 COMBINATION SW
R 6 REAR FOG LIGHT SW
J14 JUNCTION CONNECTOR
J10 JUNCTION CONNECTOR
J 8 JUNCTION CONNECTOR
L 4 LIGHT FAILURE SENSOR
C10 CLOCK
ILL+
A33 AUTOMATIC LIGHT CONTROL SENSOR
B 1 BRAKE FLUID LEVEL WARNING SW
B 7 BUCKLE SW LH
J23 JUNCTION CONNECTOR
IF
EB
BJ

∗1 : FRONT FOG LIGHT SW
∗2 : W/ DAYTIME RUNNING LIGHT
∗3 : W/O DAYTIME RUNNING LIGHT

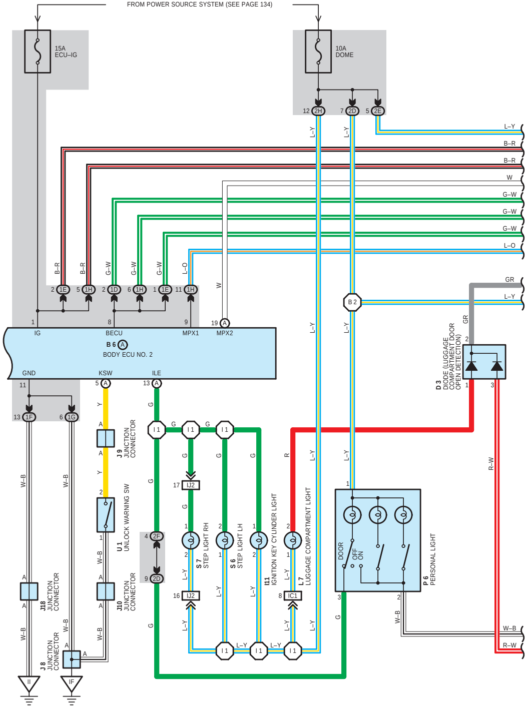
FROM POWER SOURCE SYSTEM (SEE PAGE 134)
15A ECU–IG
10A DOME
IG
BECU
MPX1
MPX2
B 6 (A)
BODY ECU NO. 2
GND
KSW
ILE
J 9 JUNCTION CONNECTOR
U 1 UNLOCK WARNING SW
J10 JUNCTION CONNECTOR
J18 JUNCTION CONNECTOR
J 8 JUNCTION CONNECTOR
S 7 STEP LIGHT RH
S 6 STEP LIGHT LH
I11 IGNITION KEY CYLINDER LIGHT
L 7 LUGGAGE COMPARTMENT LIGHT
D 3 DIODE (LUGGAGE COMPARTMENT DOOR OPEN DETECTION)
P 6 PERSONAL LIGHT
DOOR
OFF
ON
B 2
II
IF

MULTIPLEX COMMUNICATION SYSTEM (LHD)

∗ 4 : W/ LEXUS NAVIGATION SYSTEM
∗ 5 : W/O LEXUS NAVIGATION SYSTEM

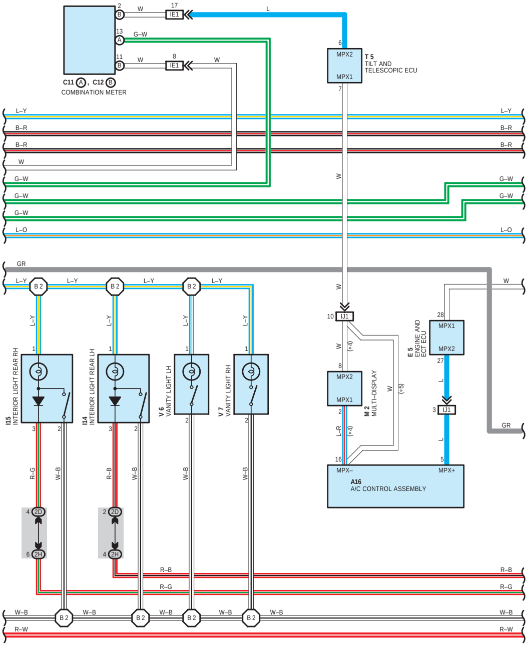
C11 A , C12 B
COMBINATION METER
IE1
T5
TILT AND TELESCOPIC ECU
MPX2
MPX1
L-Y
B-R
W
G-W
L-O
GR
L
B2
I15
INTERIOR LIGHT REAR RH
I14
INTERIOR LIGHT REAR LH
V6
VANITY LIGHT LH
V7
VANITY LIGHT RH
2D
2H
IJ1
(∗4)
(∗5)
M2
MULTI-DISPLAY
E5
ENGINE AND ECT ECU
A16
A/C CONTROL ASSEMBLY
MPX-
MPX+
L-R
R-G
W-B
R-B
R-W

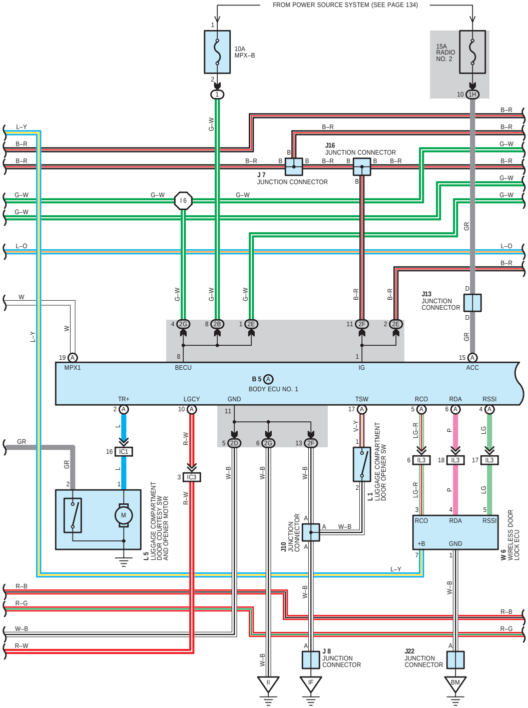
FROM POWER SOURCE SYSTEM (SEE PAGE 134)
10A
MPX-B
15A
RADIO NO. 2
1H
J16
JUNCTION CONNECTOR
J7
JUNCTION CONNECTOR
I6
J13
JUNCTION CONNECTOR
2G
2B
2E
2F
B5 A
BODY ECU NO. 1
MPX1
BECU
IG
ACC
TR+
LGCY
GND
TSW
RCO
RDA
RSSI
IC1
IC3
IL3
L5
LUGGAGE COMPARTMENT DOOR COURTESY SW AND OPENER MOTOR
M
L1
LUGGAGE COMPARTMENT DOOR OPENER SW
J10
JUNCTION CONNECTOR
W6
WIRELESS DOOR LOCK ECU
+B
J8
JUNCTION CONNECTOR
J22
JUNCTION CONNECTOR
II
IF
BM
L-Y
B-R
G-W
L-O
W
GR
R-B
R-G
W-B
R-W
V-Y
LG-R
P
LG

MULTIPLEX COMMUNICATION SYSTEM (LHD)

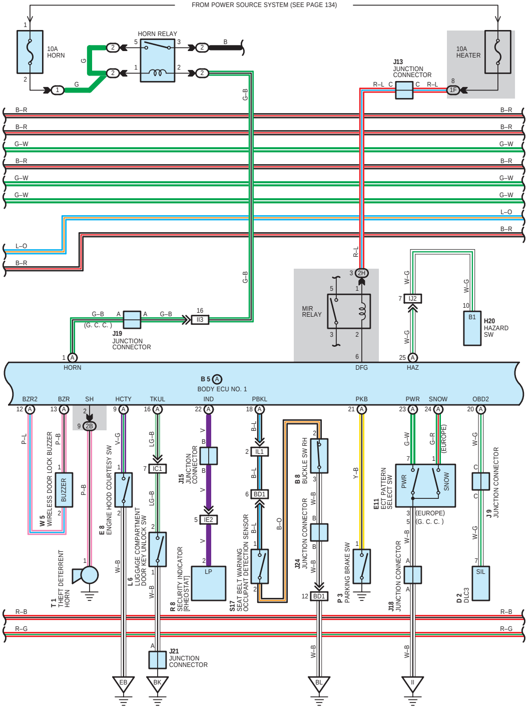
FROM POWER SOURCE SYSTEM (SEE PAGE 134)
10A HORN
HORN RELAY
10A HEATER
J13 JUNCTION CONNECTOR
MIR RELAY
H20 HAZARD SW
J19 JUNCTION CONNECTOR
(G. C. C.)
B 5 A
BODY ECU NO. 1
HORN
DFG
HAZ
BZR2
BZR
SH
HCTY
TKUL
IND
PBKL
PKB
PWR
SNOW
OBD2
W 5 WIRELESS DOOR LOCK BUZZER
BUZZER
T 1 THEFT DETERRENT HORN
E 8 ENGINE HOOD COURTESY SW
L 6 LUGGAGE COMPARTMENT DOOR KEY UNLOCK SW
R 8 SECURITY INDICATOR [RHEOSTAT]
LP
J15 JUNCTION CONNECTOR
S17 SEAT BELT WARNING OCCUPANT DETECTION SENSOR
B 8 BUCKLE SW RH
J24 JUNCTION CONNECTOR
P 3 PARKING BRAKE SW
E11 ECT PATTERN SELECT SW
(EUROPE)
(G. C. C.)
J18 JUNCTION CONNECTOR
J 9 JUNCTION CONNECTOR
D 2 DLC3
SIL
J21 JUNCTION CONNECTOR
EB
BK
BL
II

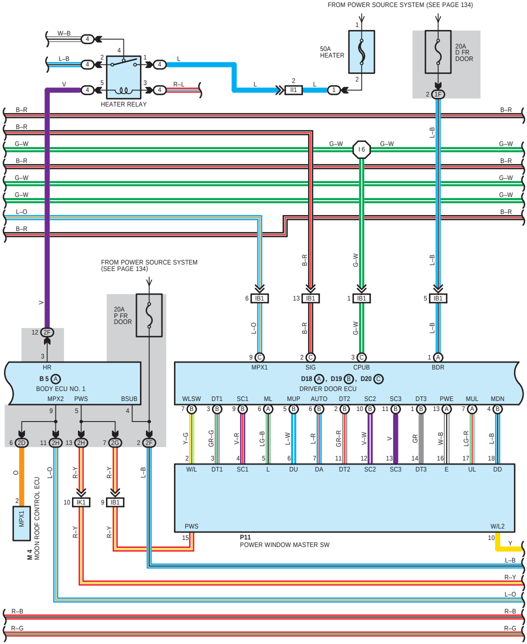
FROM POWER SOURCE SYSTEM (SEE PAGE 134)
HEATER RELAY
50A HEATER
20A D FR DOOR
FROM POWER SOURCE SYSTEM (SEE PAGE 134)
20A P FR DOOR
B 5 A
BODY ECU NO. 1
HR
MPX2
PWS
BSUB
D18 A, D19 B, D20 C
DRIVER DOOR ECU
MPX1
SIG
CPUB
BDR
WLSW
DT1
SC1
ML
MUP
AUTO
DT2
SC2
SC3
DT3
PWE
MUL
MDN
M 4 MOON ROOF CONTROL ECU
MPX1
P11 POWER WINDOW MASTER SW
PWS
W/L2
W/L
DT1
SC1
L
DU
DA
DT2
SC2
SC3
DT3
E
UL
DD

MULTIPLEX COMMUNICATION SYSTEM (LHD)

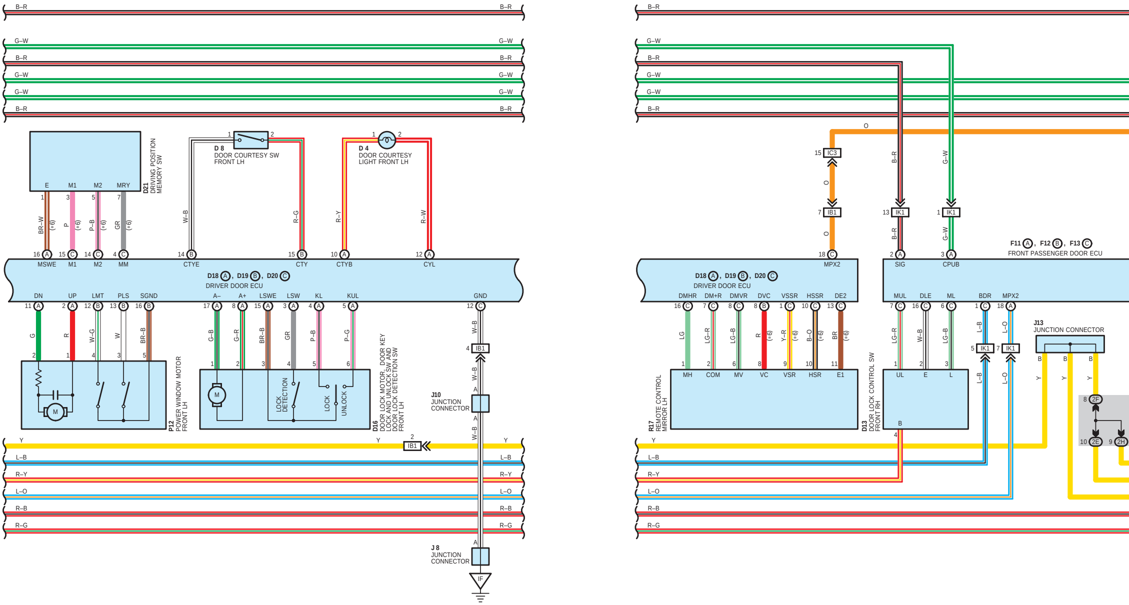
B–R
G–W
B–R
G–W
G–W
B–R
D21
DRIVING POSITION MEMORY SW
E M1 M2 MRY
BR–W (∗6)
P (∗6)
P–B (∗6)
GR (∗6)
D 8
DOOR COURTESY SW FRONT LH
W–B
R–G
D 4
DOOR COURTESY LIGHT FRONT LH
R–Y
R–W
MSWE M1 M2 MM CTYE CTY CTYB CYL
D18 A, D19 B, D20 C
DRIVER DOOR ECU
DN UP LMT PLS SGND A– A+ LSWE LSW KL KUL GND
G R W–G W BR–B
G–B G–R BR–B GR P–B P–G
W–B
IB1
J10
JUNCTION CONNECTOR
P12
POWER WINDOW MOTOR FRONT LH
M
D16
DOOR LOCK MOTOR, DOOR KEY LOCK AND UNLOCK SW AND DOOR LOCK DETECTION SW FRONT LH
LOCK DETECTION
LOCK
UNLOCK
Y
L–B
R–Y
L–O
R–B
R–G
J 8
JUNCTION CONNECTOR
IF
O
IC3
IB1
IK1
MPX2
SIG
CPUB
F11 A, F12 B, F13 C
FRONT PASSENGER DOOR ECU
DMHR DM+R DMVR DVC VSSR HSSR DE2
LG LG–R LG–B R (∗6) Y–R (∗6) B–O (∗6) BR (∗6)
MH COM MV VC VSR HSR E1
R17
REMOTE CONTROL MIRROR LH
MUL DLE ML BDR MPX2
LG–R W–B LG–B L–B L–O
UL E L
D13
DOOR LOCK CONTROL SW FRONT RH
J13
JUNCTION CONNECTOR
2F 2E 2H

B–R
G–W
G–W
B–R
O
Y
Y
Y
R–B
R–G

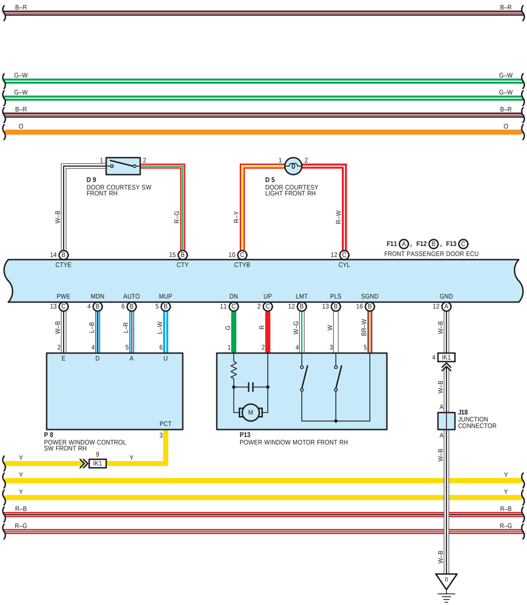
B–R
B–R
G–W
G–W
G–W
G–W
B–R
B–R
O
O
1
2
D 9
DOOR COURTESY SW
FRONT RH
W–B
R–G
1
2
D 5
DOOR COURTESY
LIGHT FRONT RH
R–Y
R–W
F11 A, F12 B, F13 C
FRONT PASSENGER DOOR ECU
14 B
CTYE
15 B
CTY
10 C
CTYB
12 C
CYL
PWE
MDN
AUTO
MUP
DN
UP
LMT
PLS
SGND
GND
13 C
4 B
6 B
5 B
11 C
2 C
12 B
13 B
16 B
12 A
W–B
L–B
L–R
L–W
G
R
W–G
W
BR–W
W–B
2
4
5
6
E
D
A
U
PCT
3
P 8
POWER WINDOW CONTROL
SW FRONT RH
1
2
4
3
5
M
P13
POWER WINDOW MOTOR FRONT RH
4
IK1
W–B
A
J18
JUNCTION
CONNECTOR
A
W–B
9
IK1
Y
Y
Y
Y
Y
Y
Y
R–B
R–B
R–G
R–G
W–B
II

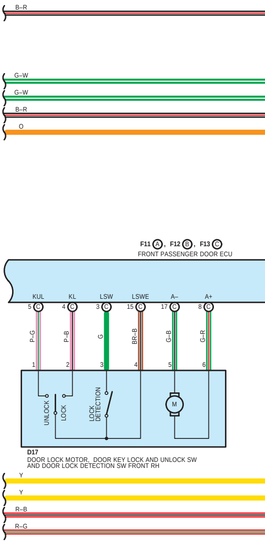
B–R
G–W
G–W
B–R
O
F11 A, F12 B, F13 C
FRONT PASSENGER DOOR ECU
KUL
KL
LSW
LSWE
A–
A+
5 C
4 C
3 C
15 C
17 C
8 C
P–G
P–B
G
BR–B
G–B
G–R
1
2
3
4
5
6
UNLOCK
LOCK
LOCK
DETECTION
M
D17
DOOR LOCK MOTOR, DOOR KEY LOCK AND UNLOCK SW
AND DOOR LOCK DETECTION SW FRONT RH
Y
Y
R–B
R–G

* 6 : W/ DRIVING POSITION MEMORY

MULTIPLEX COMMUNICATION SYSTEM (LHD)

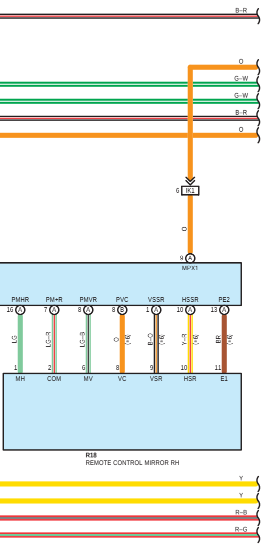

B–R
O
G–W
G–W
B–R
O
IK1
6
O
9
A
MPX1
PMHR
PM+R
PMVR
PVC
VSSR
HSSR
PE2
16 A
7 A
8 A
8 B
1 A
10 A
13 A
LG
LG–R
LG–B
O (*6)
B–O (*6)
Y–R (*6)
BR (*6)
1
2
6
8
9
10
11
MH
COM
MV
VC
VSR
HSR
E1
R18
REMOTE CONTROL MIRROR RH
Y
Y
R–B
R–G

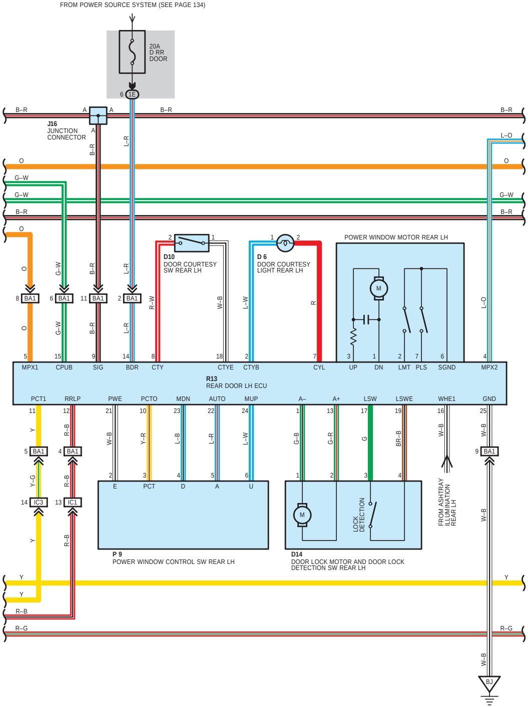

FROM POWER SOURCE SYSTEM (SEE PAGE 134)
20A
D RR
DOOR
6 1E
B–R
A
A
A
J16
JUNCTION
CONNECTOR
B–R
L–R
B–R
L–O
O
O
G–W
G–W
G–W
B–R
B–R
O
O
G–W
B–R
L–R
8 BA1
6 BA1
11 BA1
2 BA1
O
G–W
B–R
L–R
D10
DOOR COURTESY
SW REAR LH
R–W
W–B
D 6
DOOR COURTESY
LIGHT REAR LH
L–W
R
POWER WINDOW MOTOR REAR LH
M
L–O
5 MPX1
15 CPUB
9 SIG
14 BDR
8 CTY
18 CTYE
2 CTYB
7 CYL
3 UP
1 DN
2 LMT
7 PLS
6 SGND
4 MPX2
R13
REAR DOOR LH ECU
PCT1
RRLP
PWE
PCTO
MDN
AUTO
MUP
A–
A+
LSW
LSWE
WHE1
GND
11
12
21
10
23
22
24
1
13
17
19
16
25
Y
R–B
W–B
Y–R
L–B
L–R
L–W
G–B
G–R
G
BR–B
W–B
W–B
5 BA1
4 BA1
9 BA1
Y–G
R–B
14 IC3
13 IC1
Y
R–B
2 E
3 PCT
4 D
5 A
6 U
P 9
POWER WINDOW CONTROL SW REAR LH
1
2
3
4
M
LOCK
DETECTION
D14
DOOR LOCK MOTOR AND DOOR LOCK
DETECTION SW REAR LH
FROM ASHTRAY
ILLUMINATION
REAR LH
W–B
Y
Y
Y
R–B
R–G
R–G
W–B
BJ

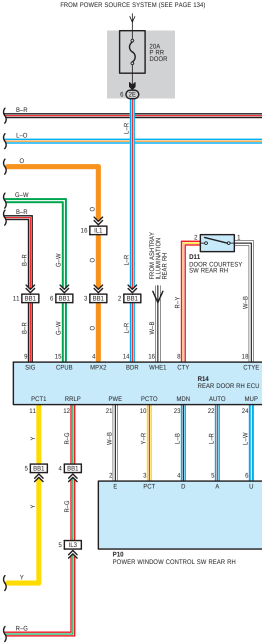

FROM POWER SOURCE SYSTEM (SEE PAGE 134)
20A
P RR
DOOR
6 2E
B–R
L–O
L–R
O
G–W
B–R
O
16 IL1
O
B–R
G–W
L–R
FROM ASHTRAY
ILLUMINATION
REAR RH
D11
DOOR COURTESY
SW REAR RH
R–Y
W–B
11 BB1
6 BB1
3 BB1
2 BB1
B–R
G–W
O
L–R
W–B
9 SIG
15 CPUB
4 MPX2
14 BDR
16 WHE1
8 CTY
18 CTYE
R14
REAR DOOR RH ECU
PCT1
RRLP
PWE
PCTO
MDN
AUTO
MUP
11
12
21
10
23
22
24
Y
R–G
W–B
Y–R
L–B
L–R
L–W
5 BB1
4 BB1
Y
R–G
5 IL3
2 E
3 PCT
4 D
5 A
6 U
P10
POWER WINDOW CONTROL SW REAR RH
Y
R–G

MULTIPLEX COMMUNICATION SYSTEM (LHD)

∗6 : W/ DRIVING POSITION MEMORY
∗7 : W/O DRIVING POSITION MEMORY

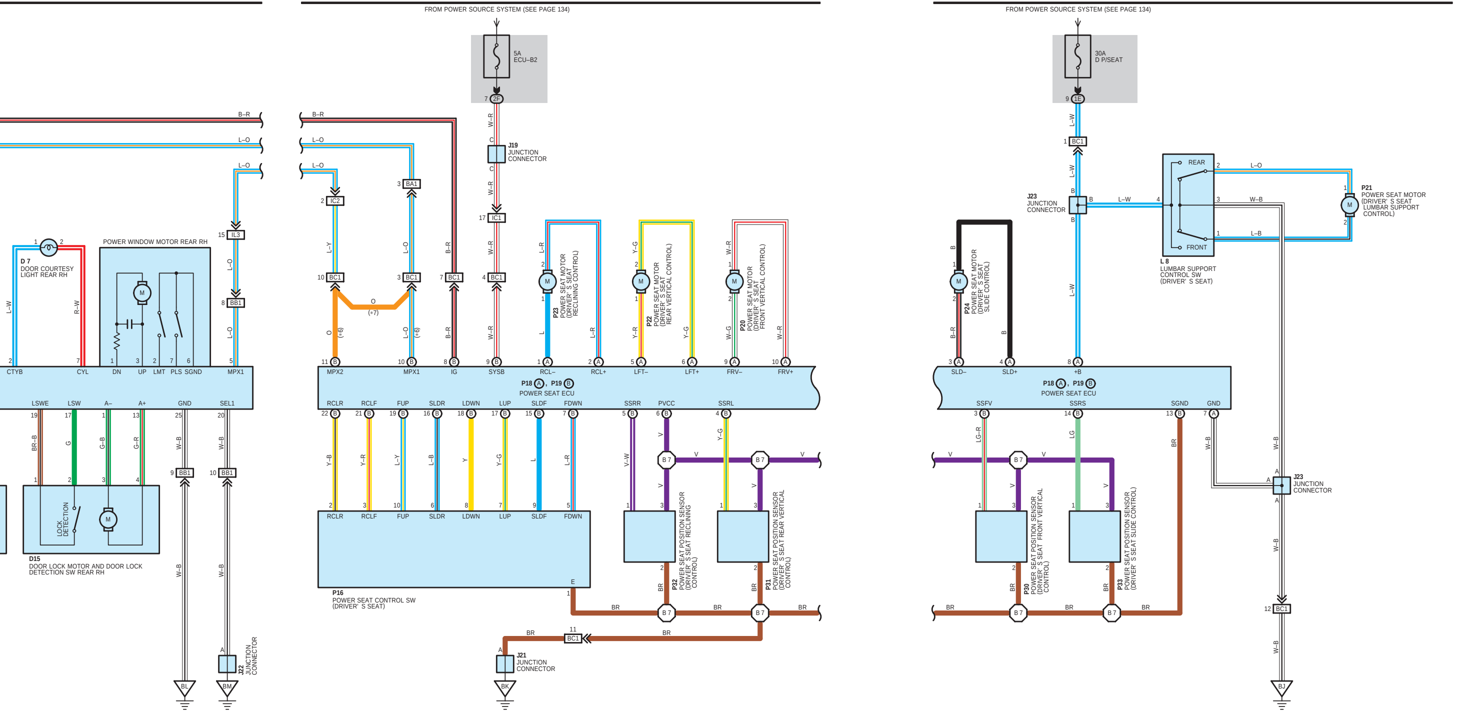
FROM POWER SOURCE SYSTEM (SEE PAGE 134)
5A ECU–B2
2F
J19 JUNCTION CONNECTOR
IC1
IC2
BA1
BC1
IL3
BB1
D 7 DOOR COURTESY LIGHT REAR RH
POWER WINDOW MOTOR REAR RH
CTYB CYL DN UP LMT PLS SGND MPX1
LSWE LSW A– A+ GND SEL1
D15 DOOR LOCK MOTOR AND DOOR LOCK DETECTION SW REAR RH
LOCK DETECTION
J22 JUNCTION CONNECTOR
BL
BM
B–R
L–O
L–Y
L–W
R–W
BR–B
G
G–B
G–R
W–B
W–R
(∗6)
(∗7)
MPX2 MPX1 IG SYSB RCL– RCL+ LFT– LFT+ FRV– FRV+
P18 A, P19 B POWER SEAT ECU
RCLR RCLF FUP SLDR LDWN LUP SLDF FDWN SSRR PVCC SSRL
P23 POWER SEAT MOTOR (DRIVER' S SEAT RECLINING CONTROL)
P22 POWER SEAT MOTOR (DRIVER' S SEAT REAR VERTICAL CONTROL)
P20 POWER SEAT MOTOR (DRIVER' S SEAT FRONT VERTICAL CONTROL)
P16 POWER SEAT CONTROL SW (DRIVER' S SEAT)
P32 POWER SEAT POSITION SENSOR (DRIVER' S SEAT RECLINING CONTROL)
P31 POWER SEAT POSITION SENSOR (DRIVER' S SEAT REAR VERTICAL CONTROL)
B 7
J21 JUNCTION CONNECTOR
BK
30A D P/SEAT
1E
J23 JUNCTION CONNECTOR
L 8 LUMBAR SUPPORT CONTROL SW (DRIVER' S SEAT)
REAR
FRONT
P21 POWER SEAT MOTOR (DRIVER' S SEAT LUMBAR SUPPORT CONTROL)
P24 POWER SEAT MOTOR (DRIVER' S SEAT SLIDE CONTROL)
SLD– SLD+ +B
SSFV SSRS SGND GND
P30 POWER SEAT POSITION SENSOR (DRIVER' S SEAT FRONT VERTICAL CONTROL)
P33 POWER SEAT POSITION SENSOR (DRIVER' S SEAT SLIDE CONTROL)
LG–R
LG
V
V–W
Y–B
Y–R
L–B
Y
Y–G
L–R
L
W–G
BR
BJ