## Radio and Player (LHD Except MARK LEVINSON)

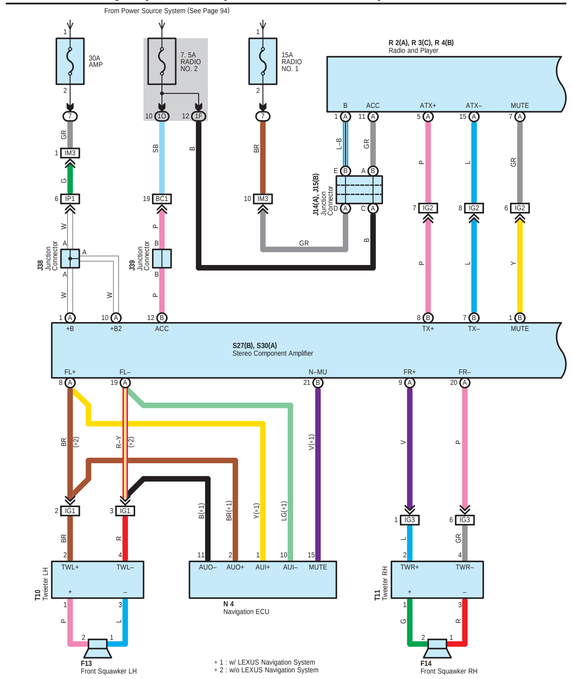




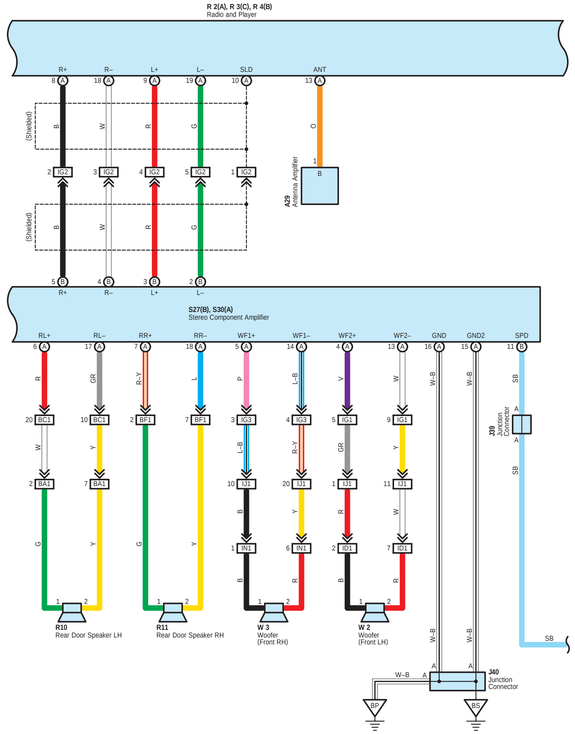



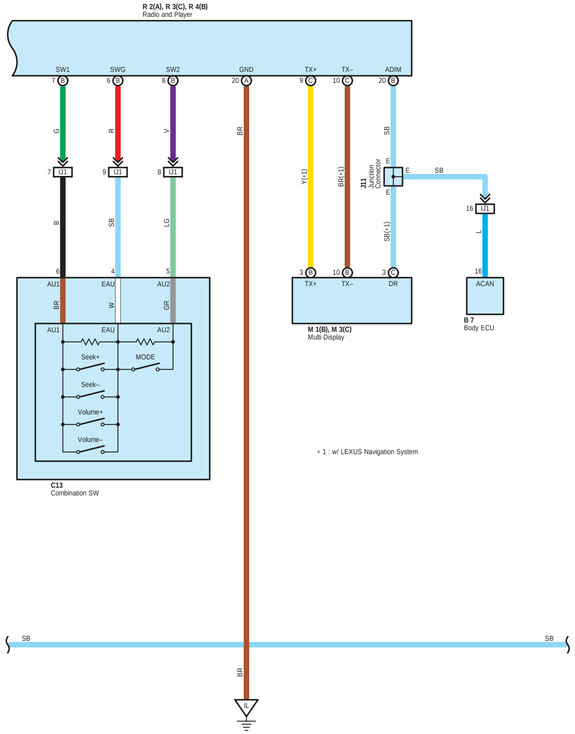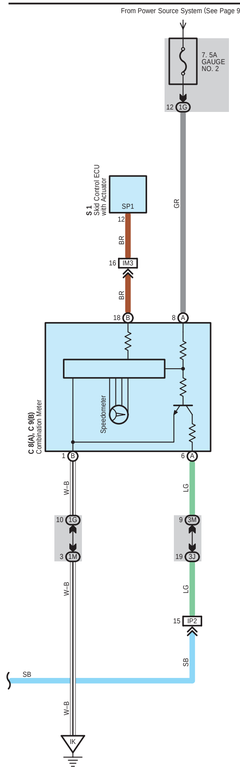
## Radio and Player (LHD Except MARK LEVINSON)